M2880_01

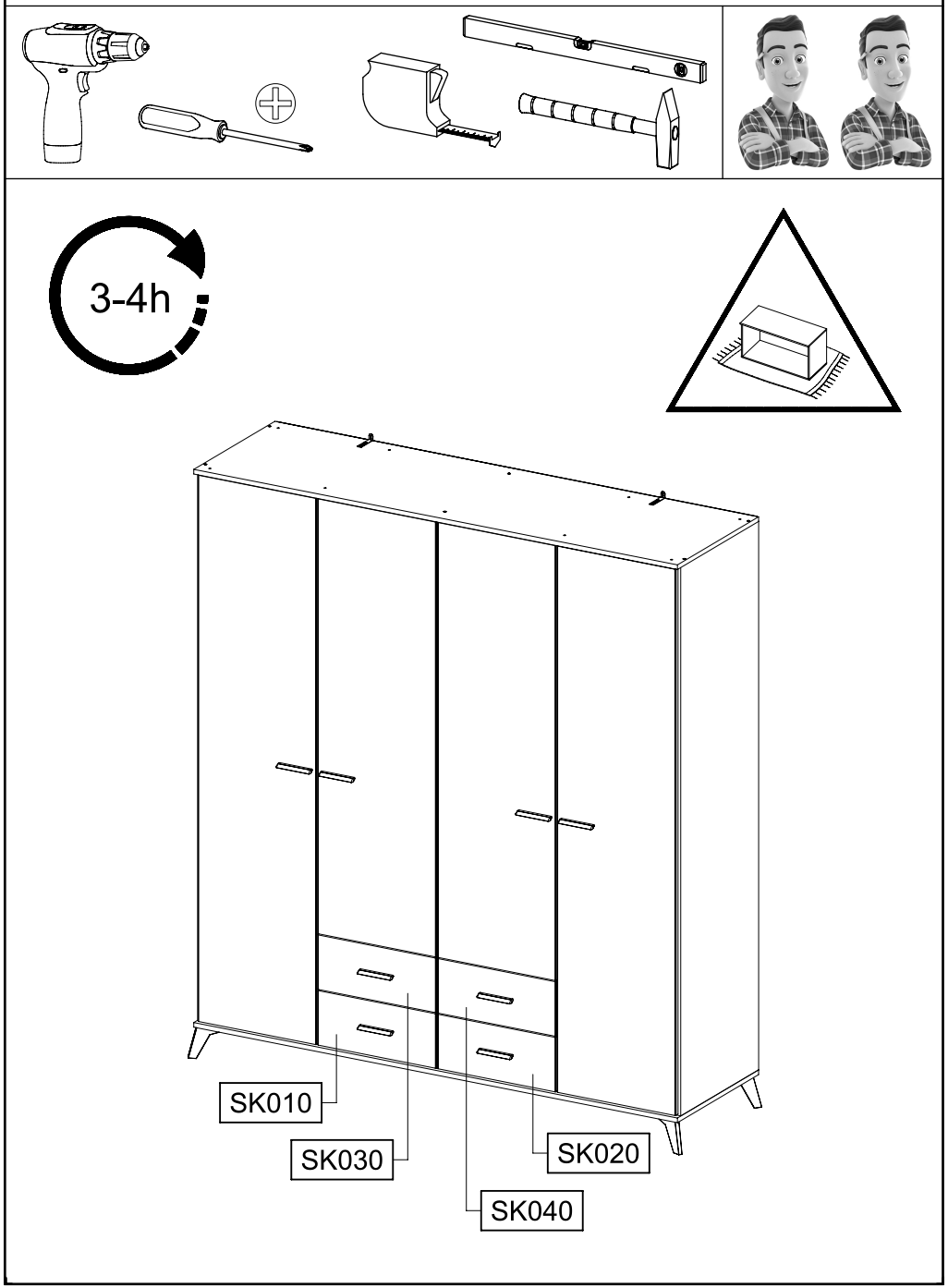

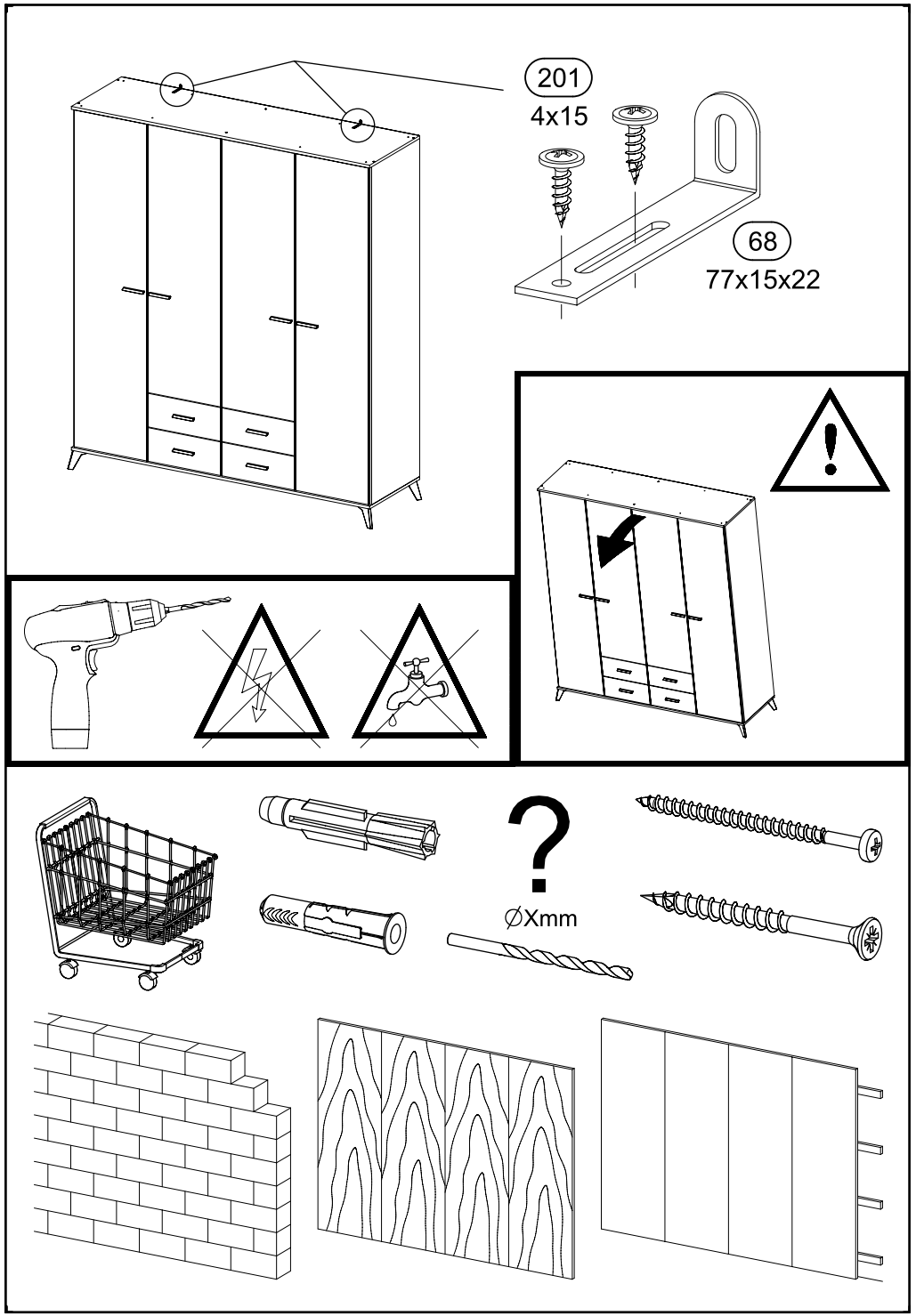

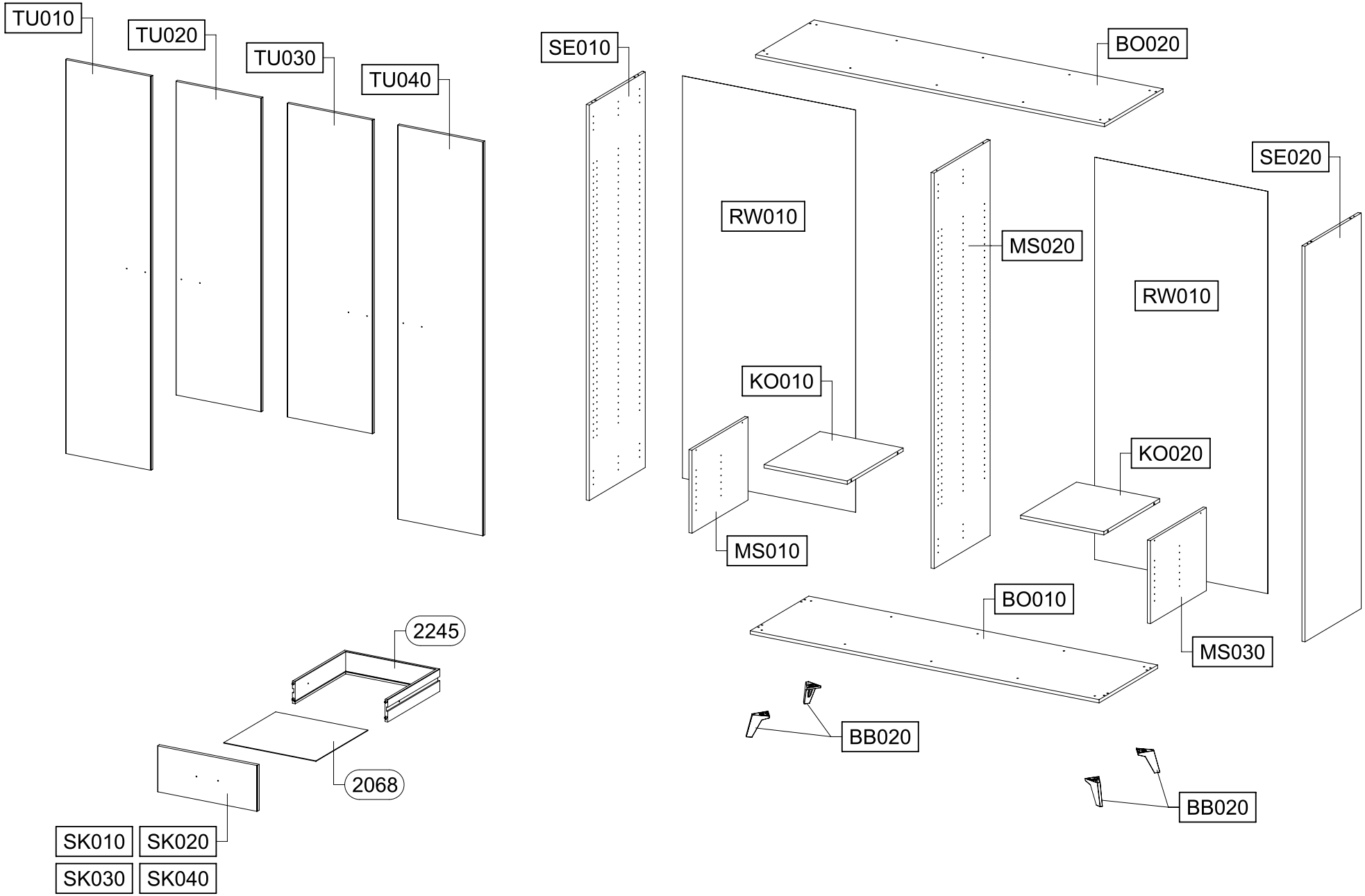
TU010
TU020
TU030
TU040
SE010
BO020
RW010
MS020
SE020
RW010
KO010
KO020
MS010
BO010
MS030
2245
2068
BB020
BB020
SK010
SK020
SK030
SK040

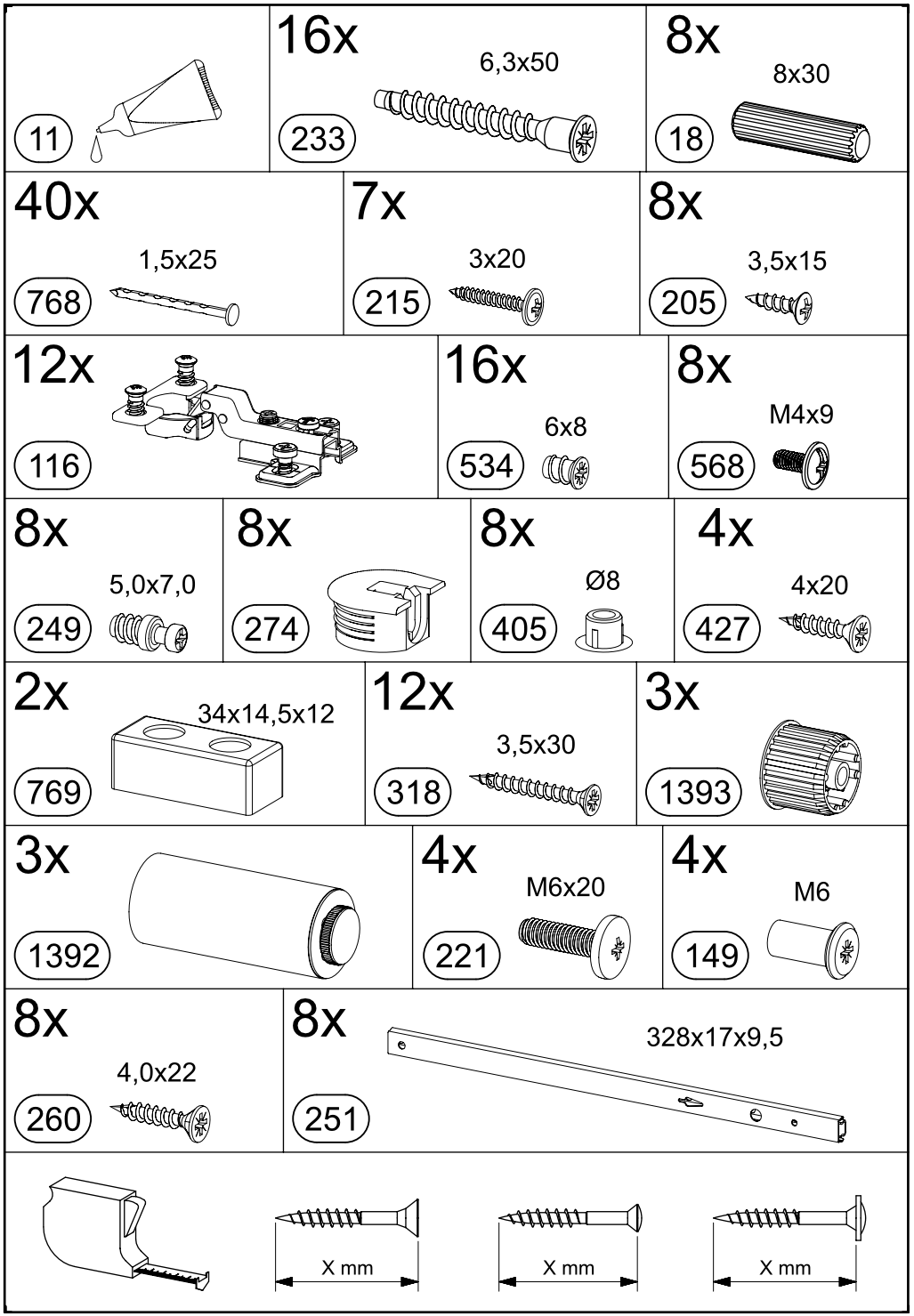
11
16x
6,3x50
233
8x
8x30
18
40x
1,5x25
768
7x
3x20
215
8x
3,5x15
205
12x
116
16x
6x8
534
8x
M4x9
568
8x
5,0x7,0
249
8x
274
8x
Ø8
405
4x
4x20
427
2x
34x14,5x12
769
12x
3,5x30
318
3x
1393
3x
1392
4x
M6x20
221
4x
M6
149
8x
4,0x22
260
8x
328x17x9,5
251
X mm
X mm
X mm

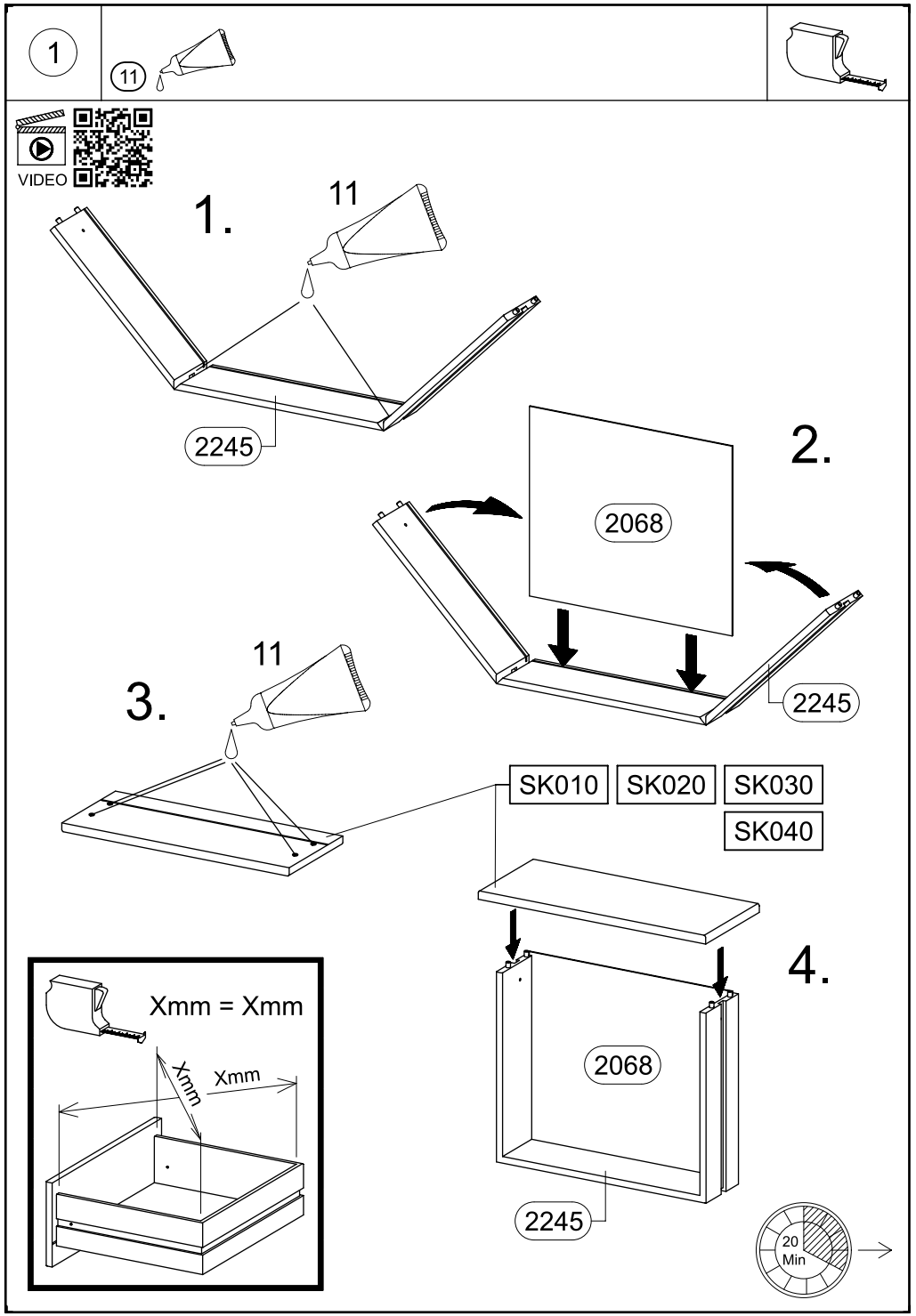
1
11
VIDEO
1.
11
2245
2.
2068
2245
3.
11
SK010
SK020
SK030
SK040
4.
2068
2245
Xmm = Xmm
Xmm
Xmm
20
Min

2

8x 18 8x30

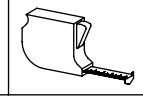

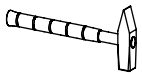

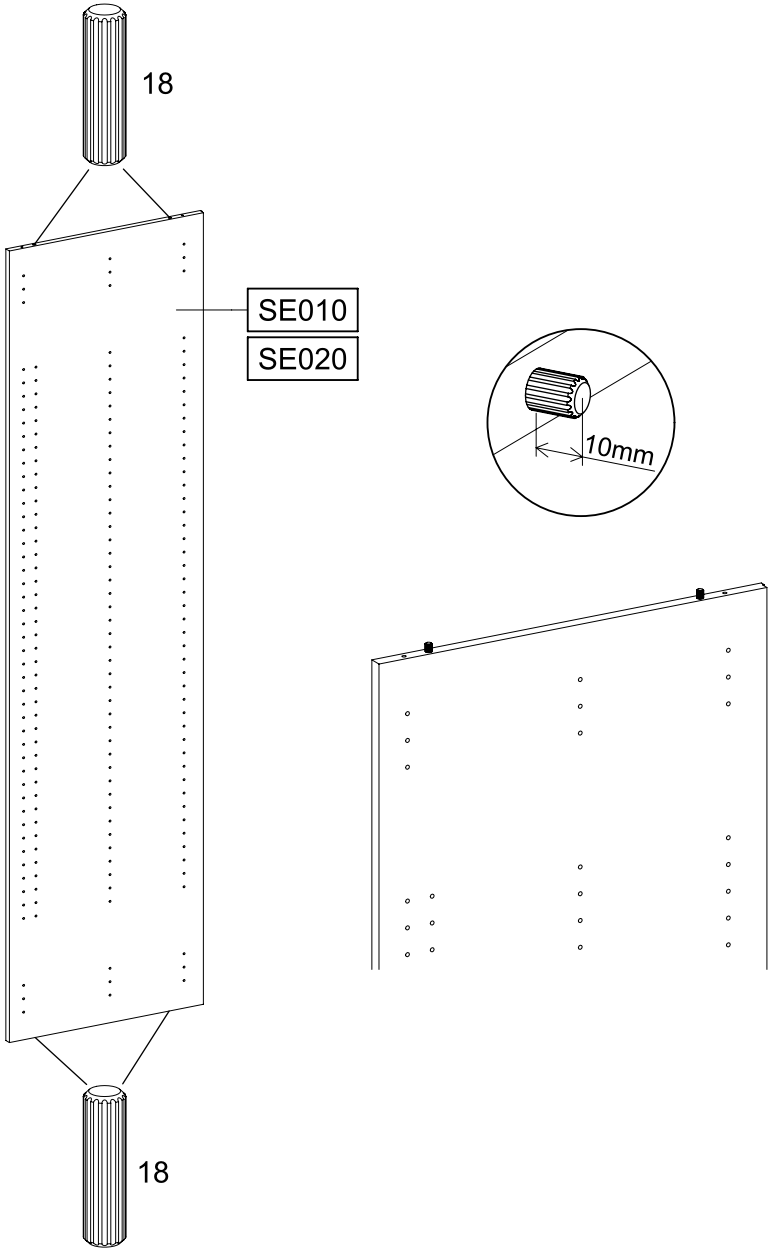

3

4x 249 5,0x7,0

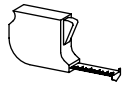

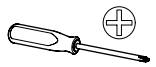

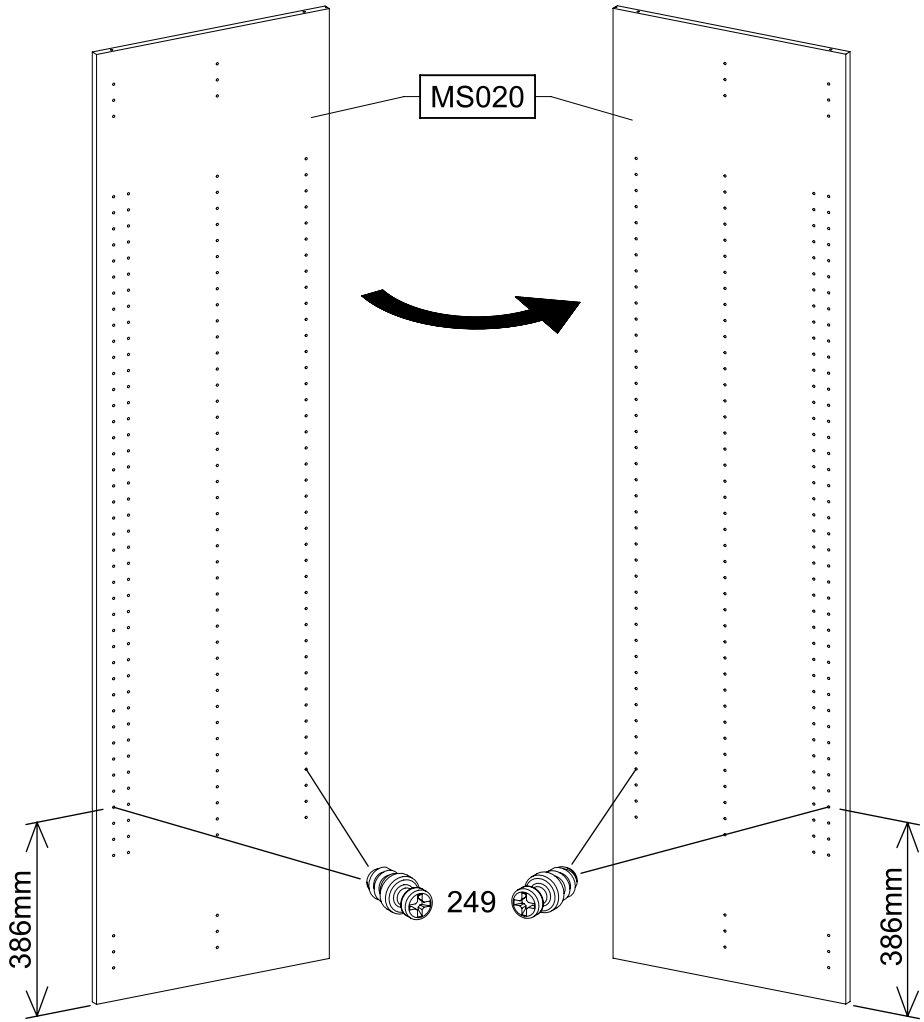

4

2x 251 328x17x9,5

4x 534 6x8

2x 205 3,5x15

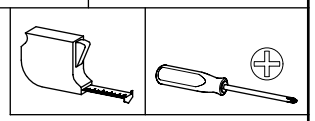

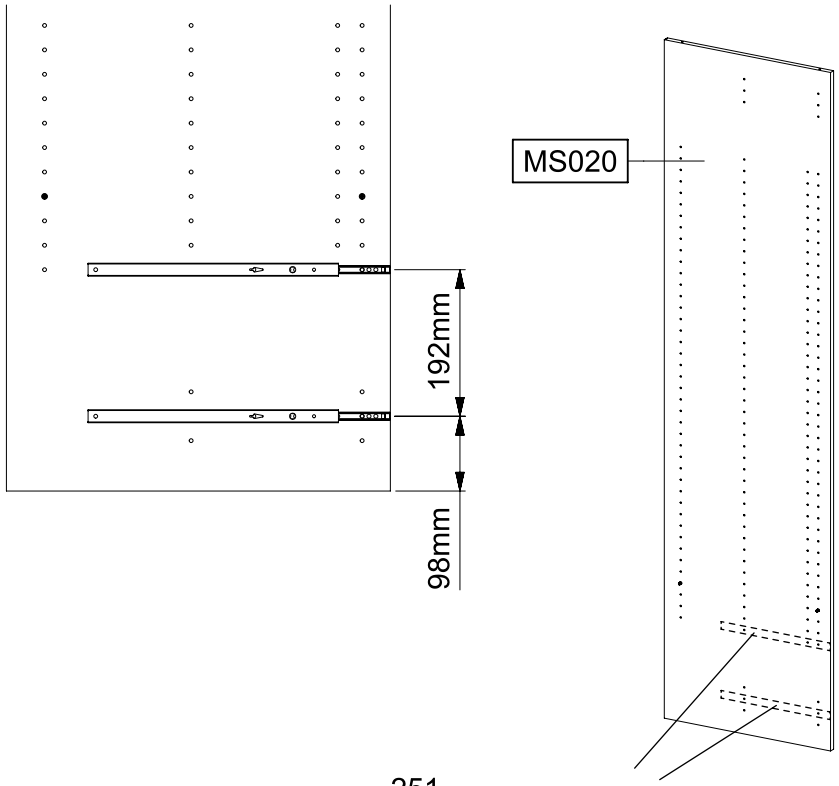

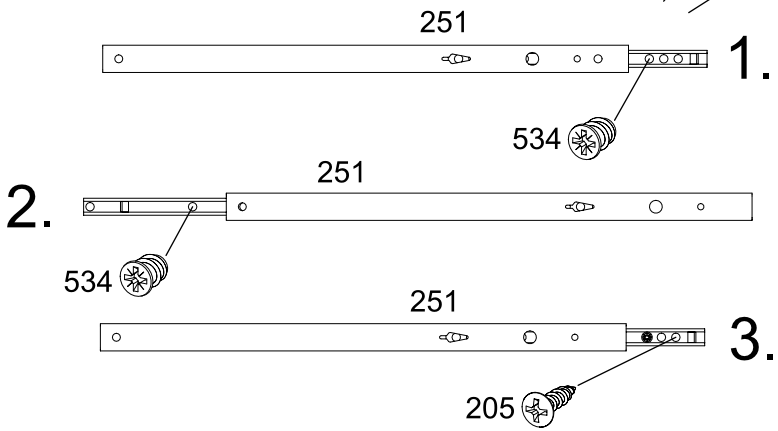

5

2x 251 328x17x9,5

4x 534 6x8

2x 205 3,5x15

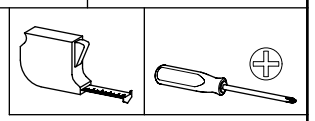

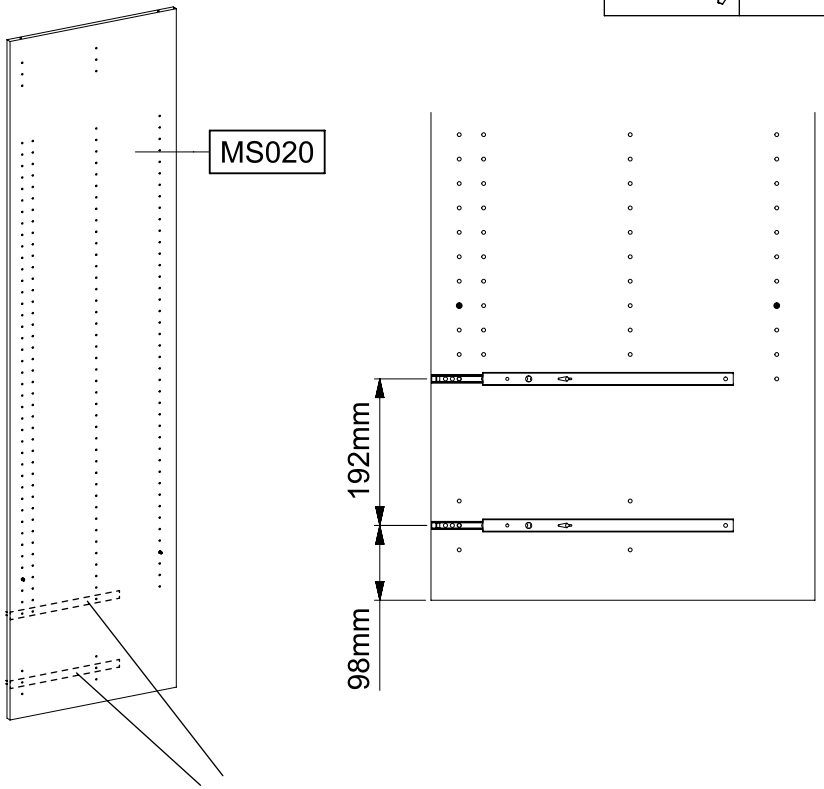

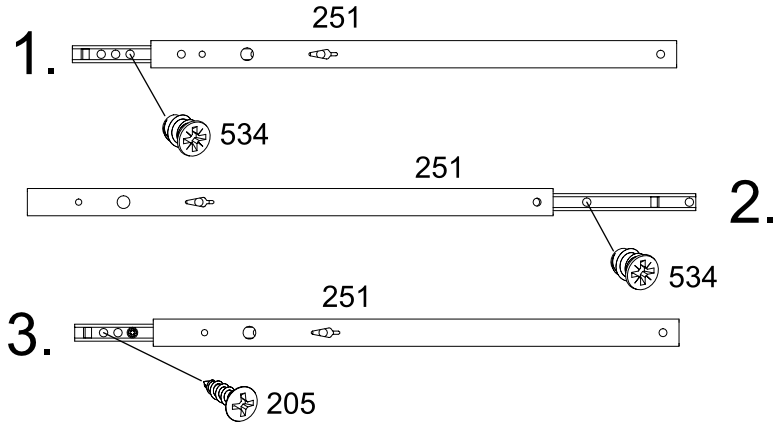

6

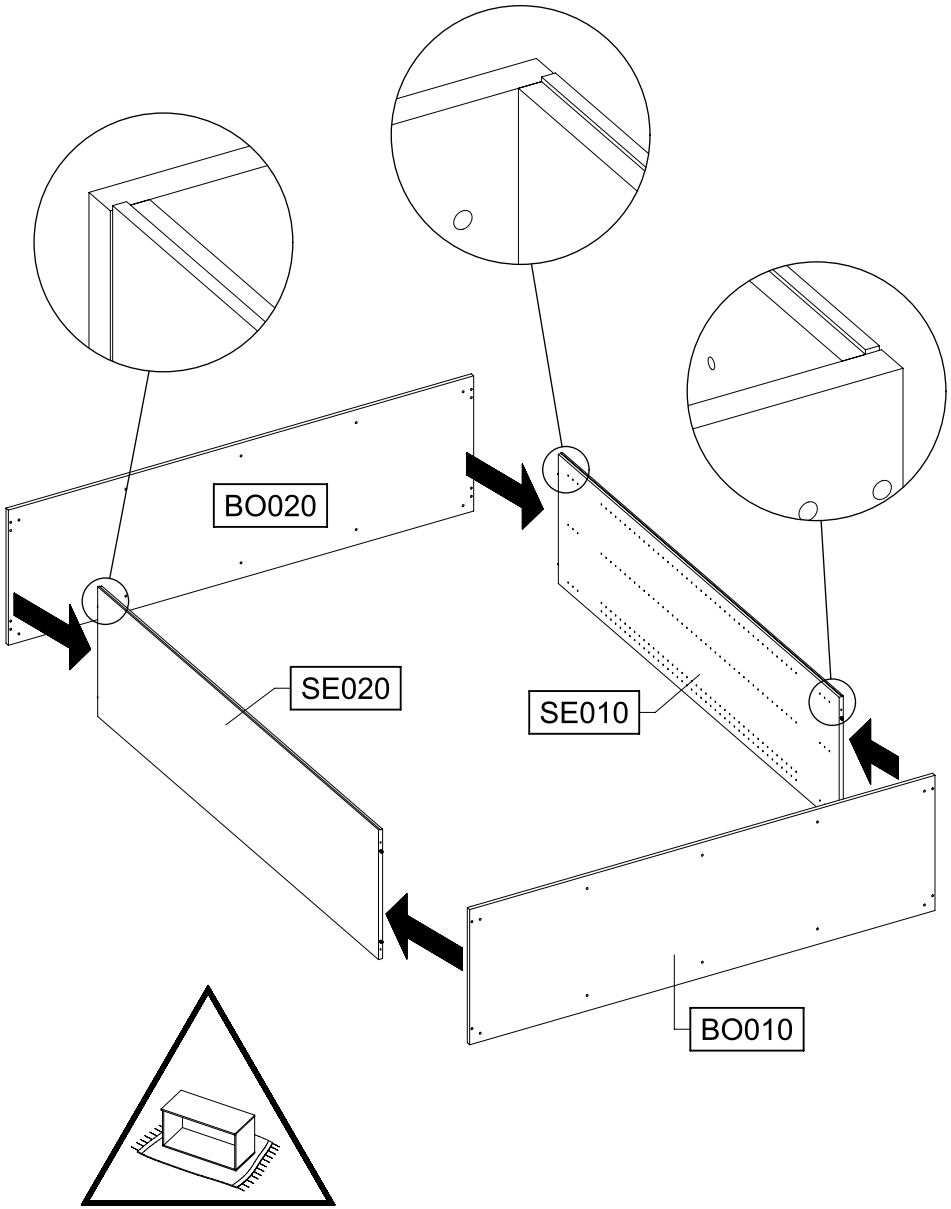
BO020
SE020
SE010
BO010

7

8x 233

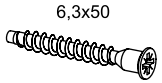
6,3x50

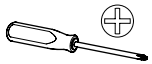

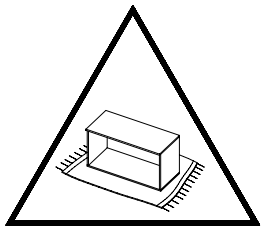

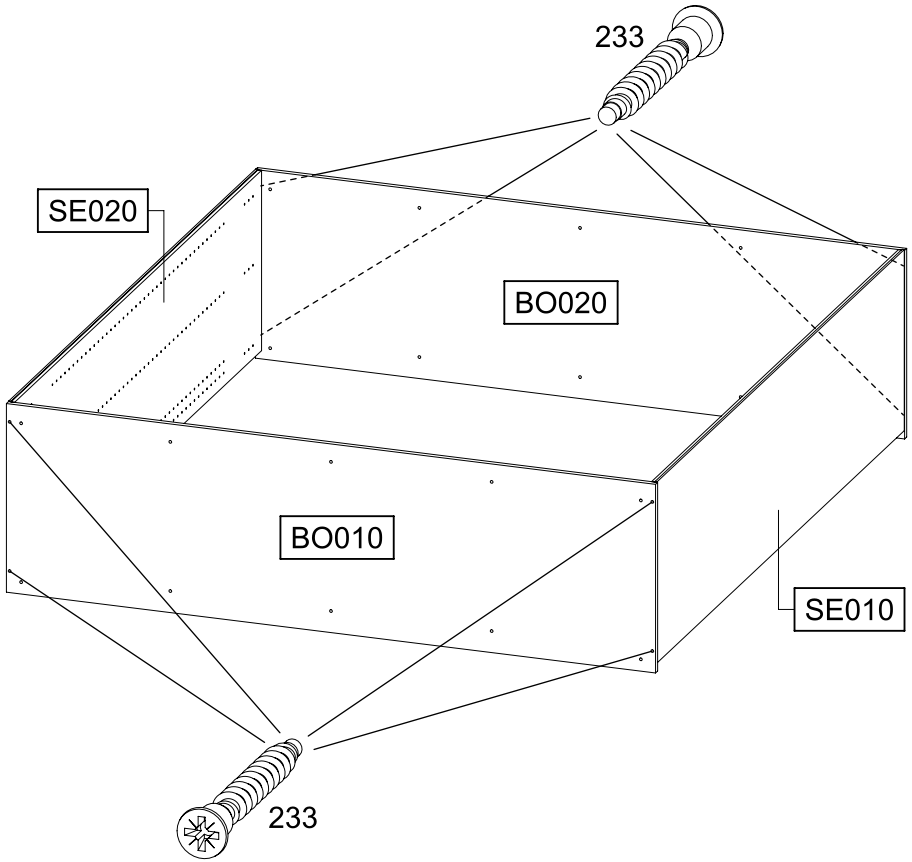
233
SE020
BO020
BO010
SE010
233

8

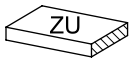

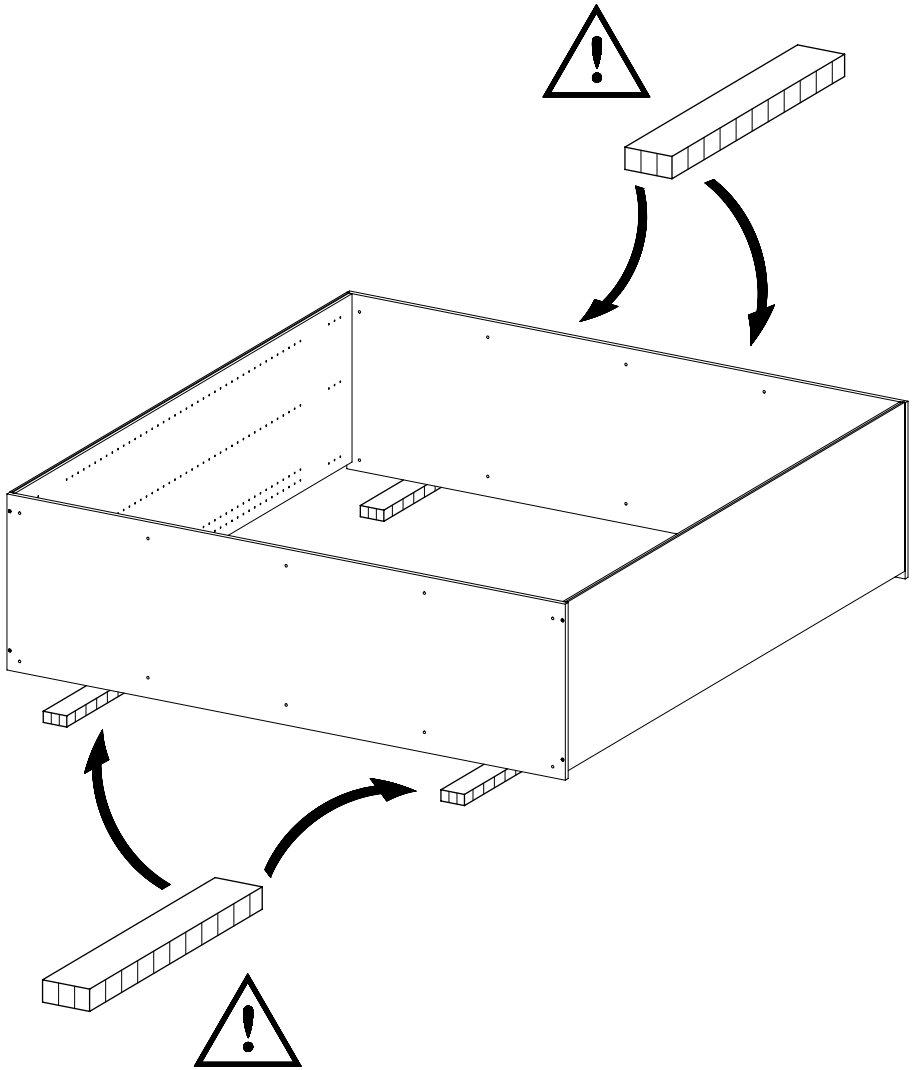

9

4x 233

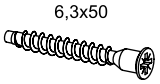

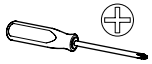

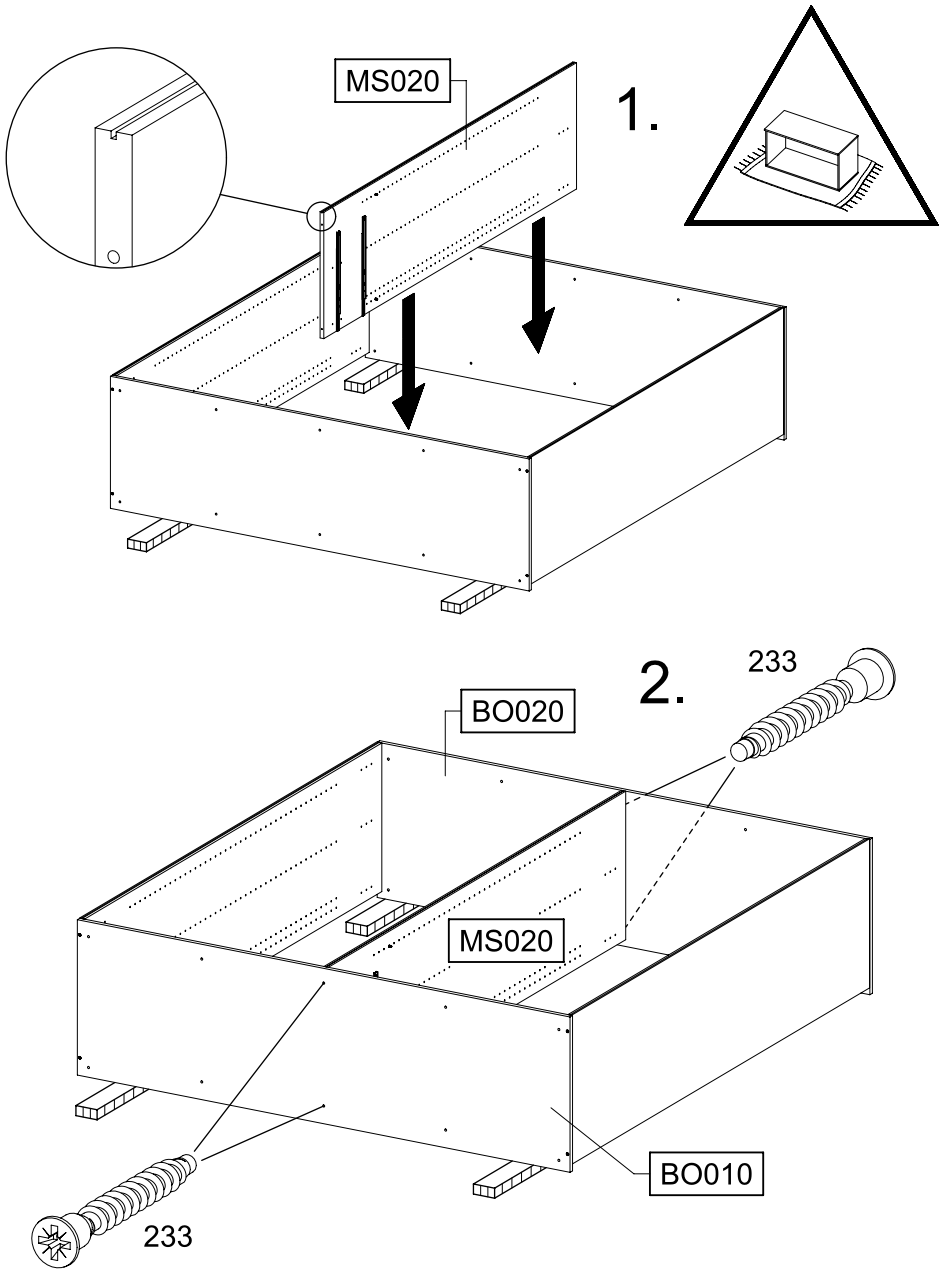

10

2x 251 328x17x9,5

4x 534 6x8

2x 205 3,5x15

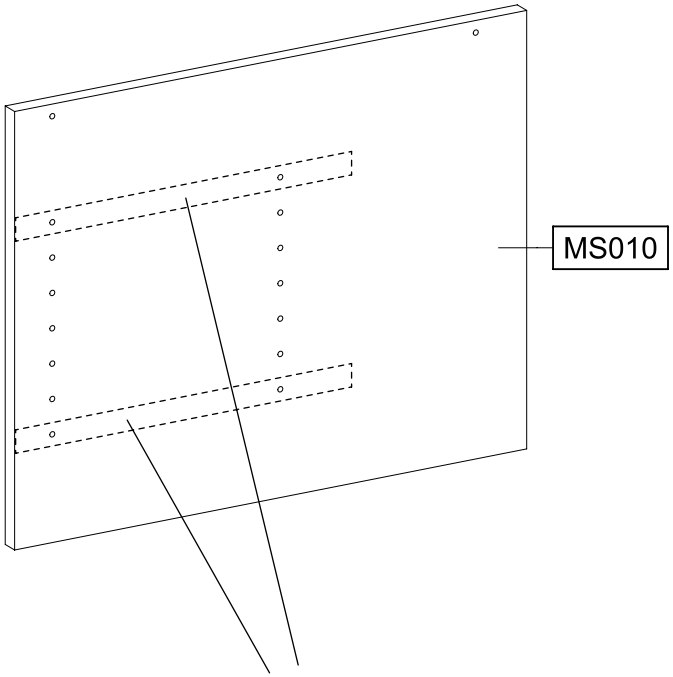

1. 251 534

2. 251 534

3. 251 205

11

2x 251 328x17x9,5

4x 534 6x8

2x 205 3,5x15

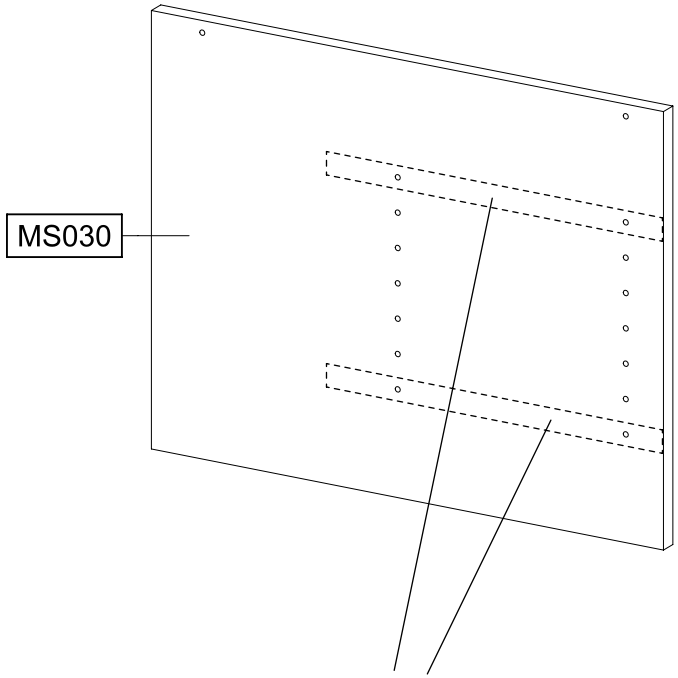

1. 251 534

2. 251 534

3. 251 205

12

4x 249 5,0x7,0

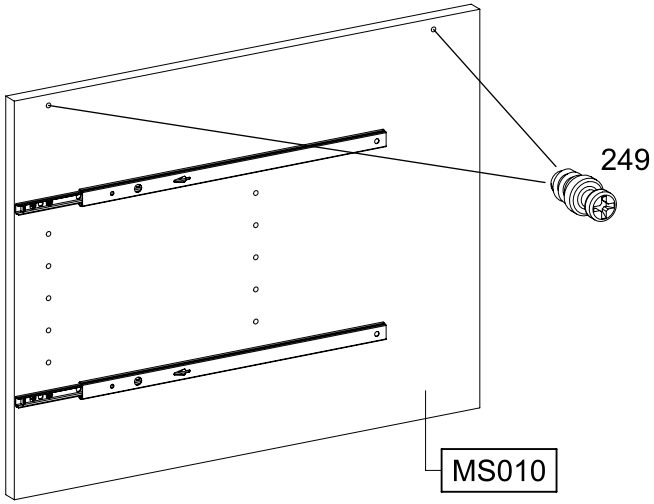

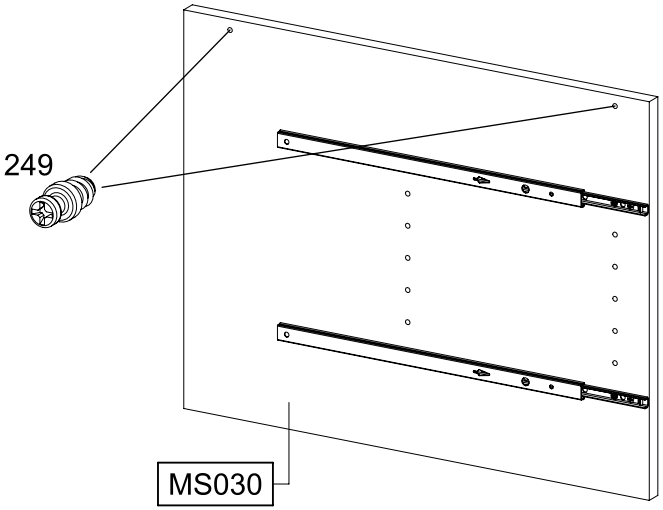

13

4x 233 6,3x50

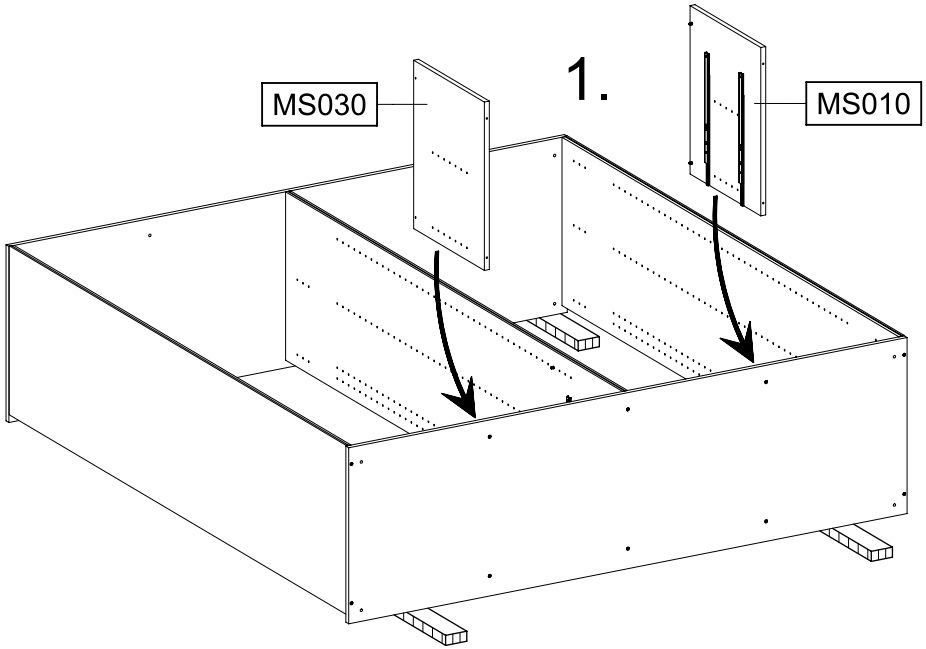

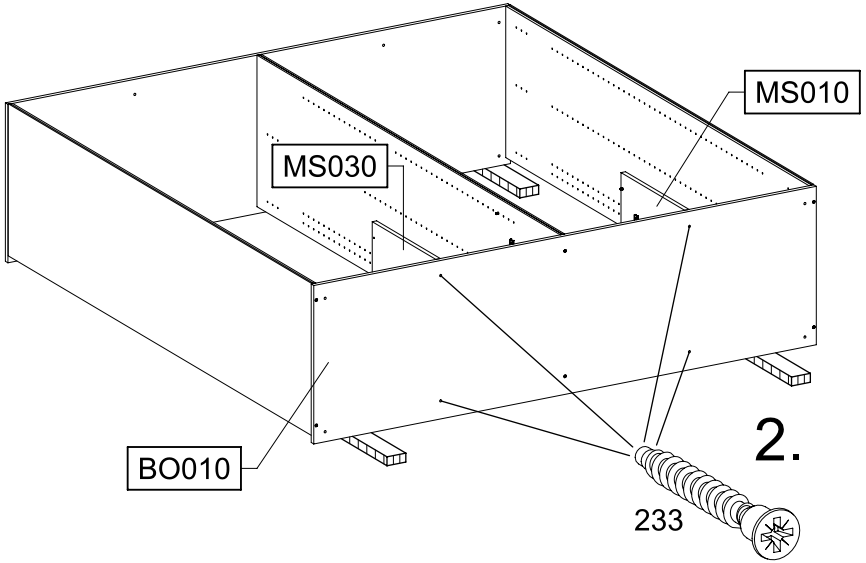

14

8x 274

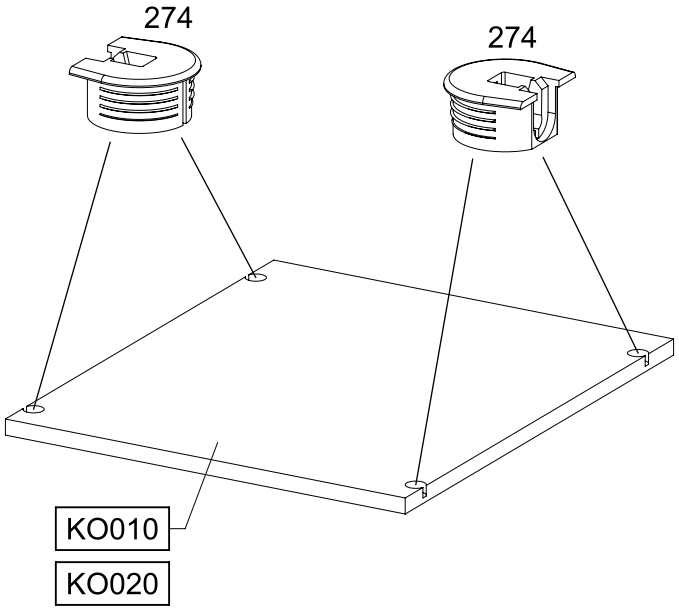

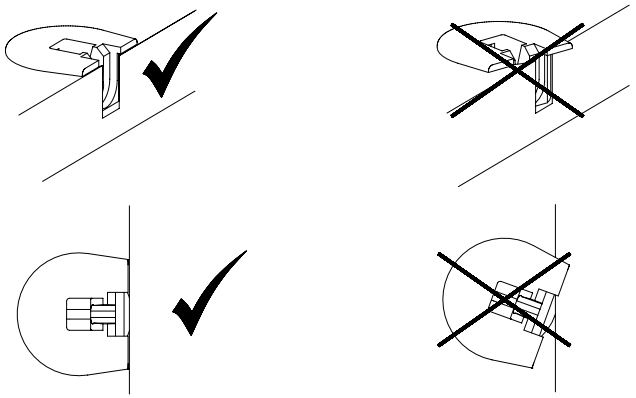

15

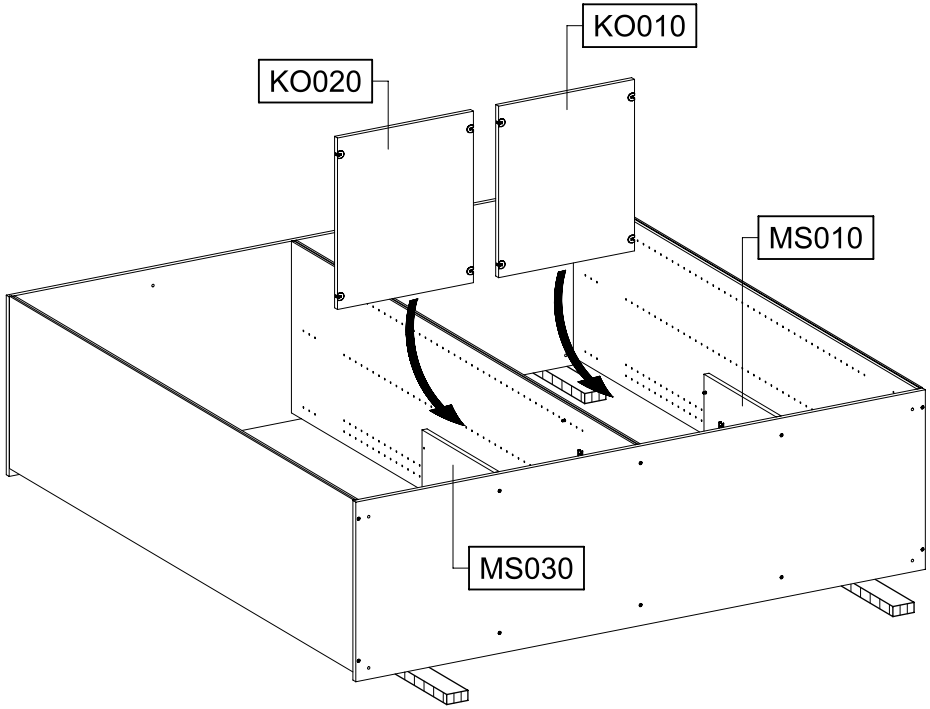

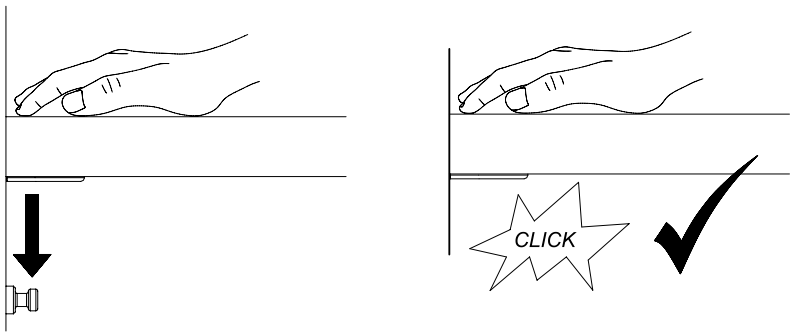

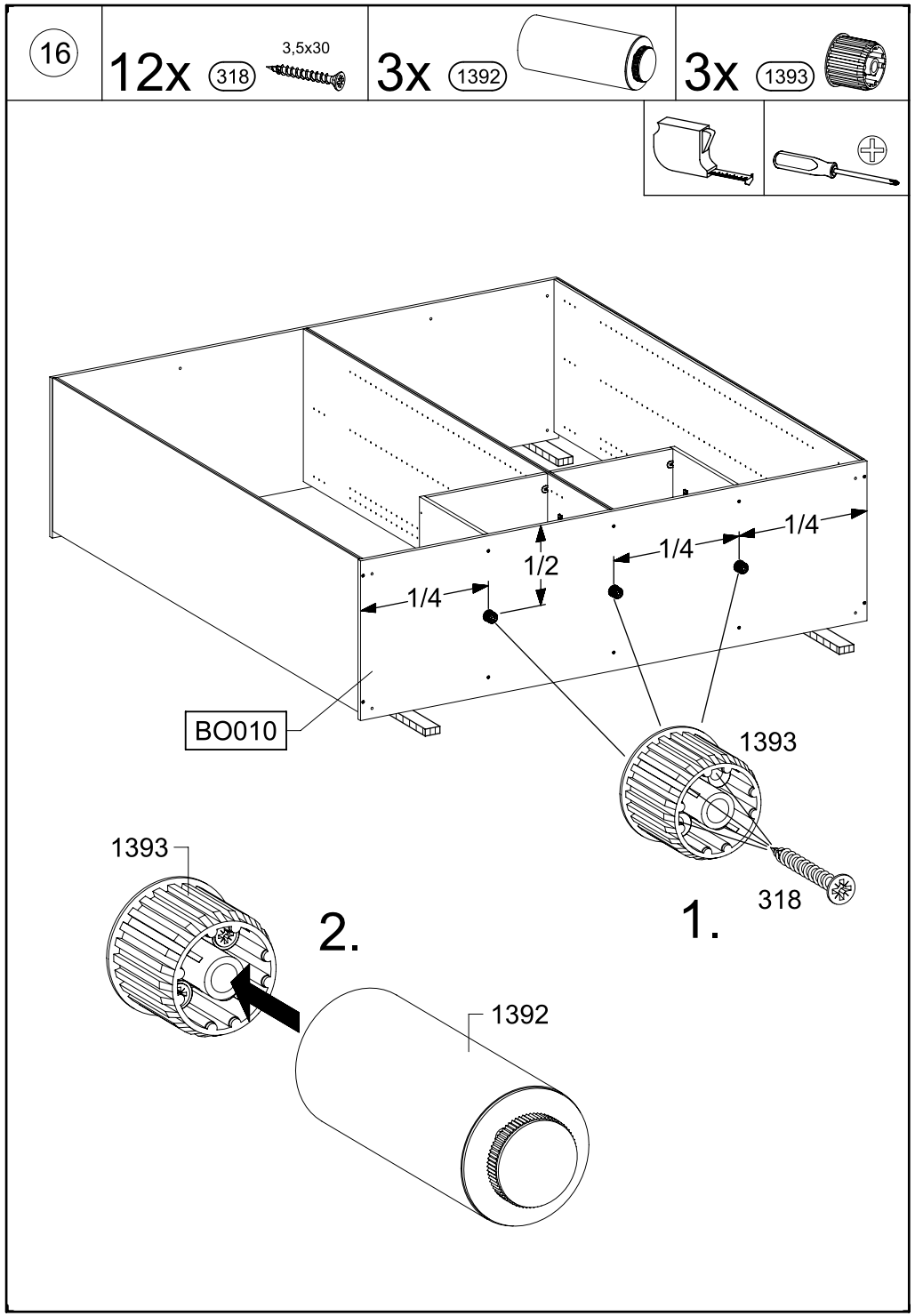
16
12x 318 3,5x30
3x 1392
3x 1393
1/4
1/2
1/4
1/4
BO010
1393
318
1.
1393
2.
1392

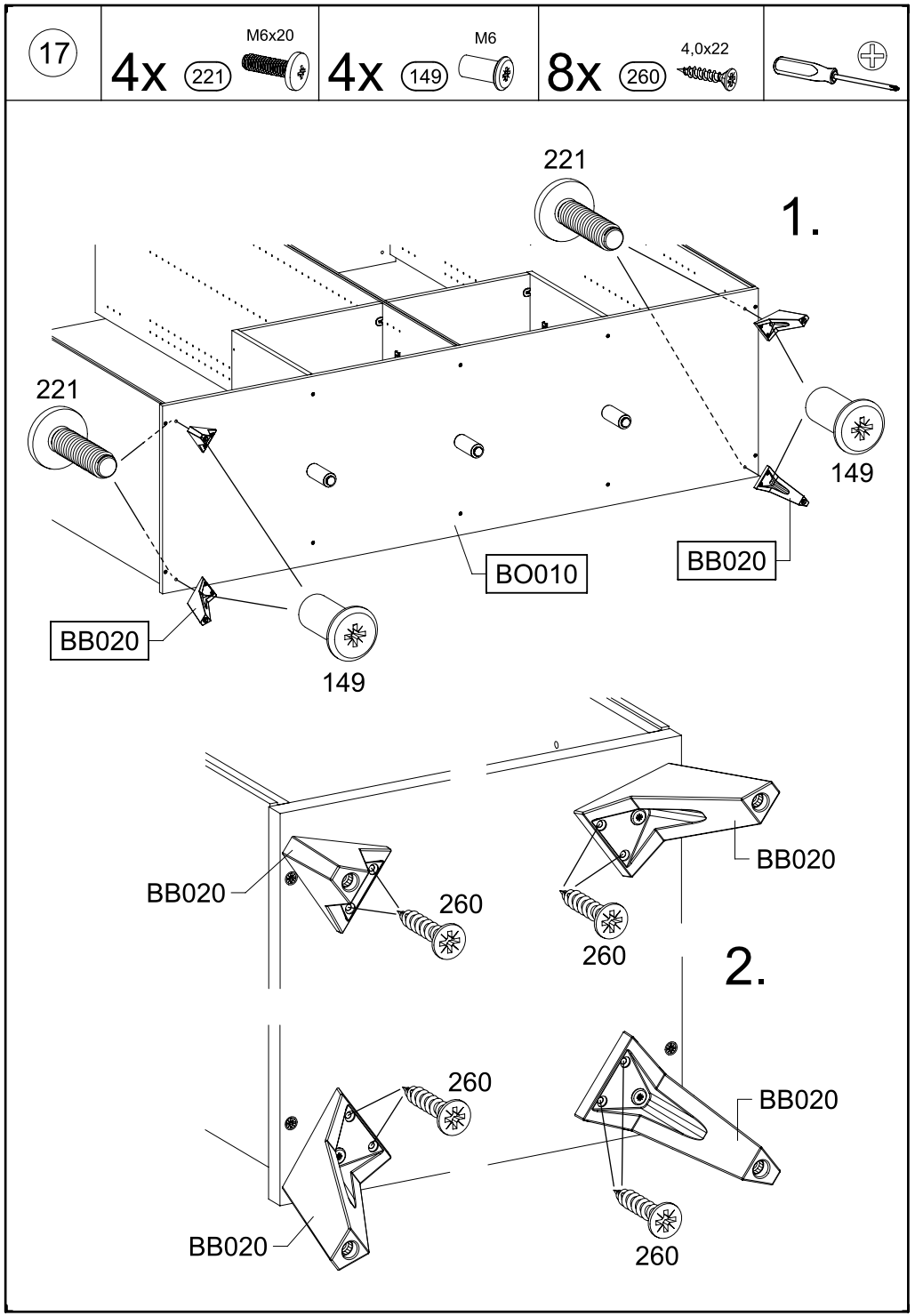
17
4x 221 M6x20
4x 149 M6
8x 260 4,0x22
221
1.
221
149
BO010
BB020
BB020
149
BB020
260
BB020
260
2.
260
BB020
BB020
260

18

12x 768 1,5x25

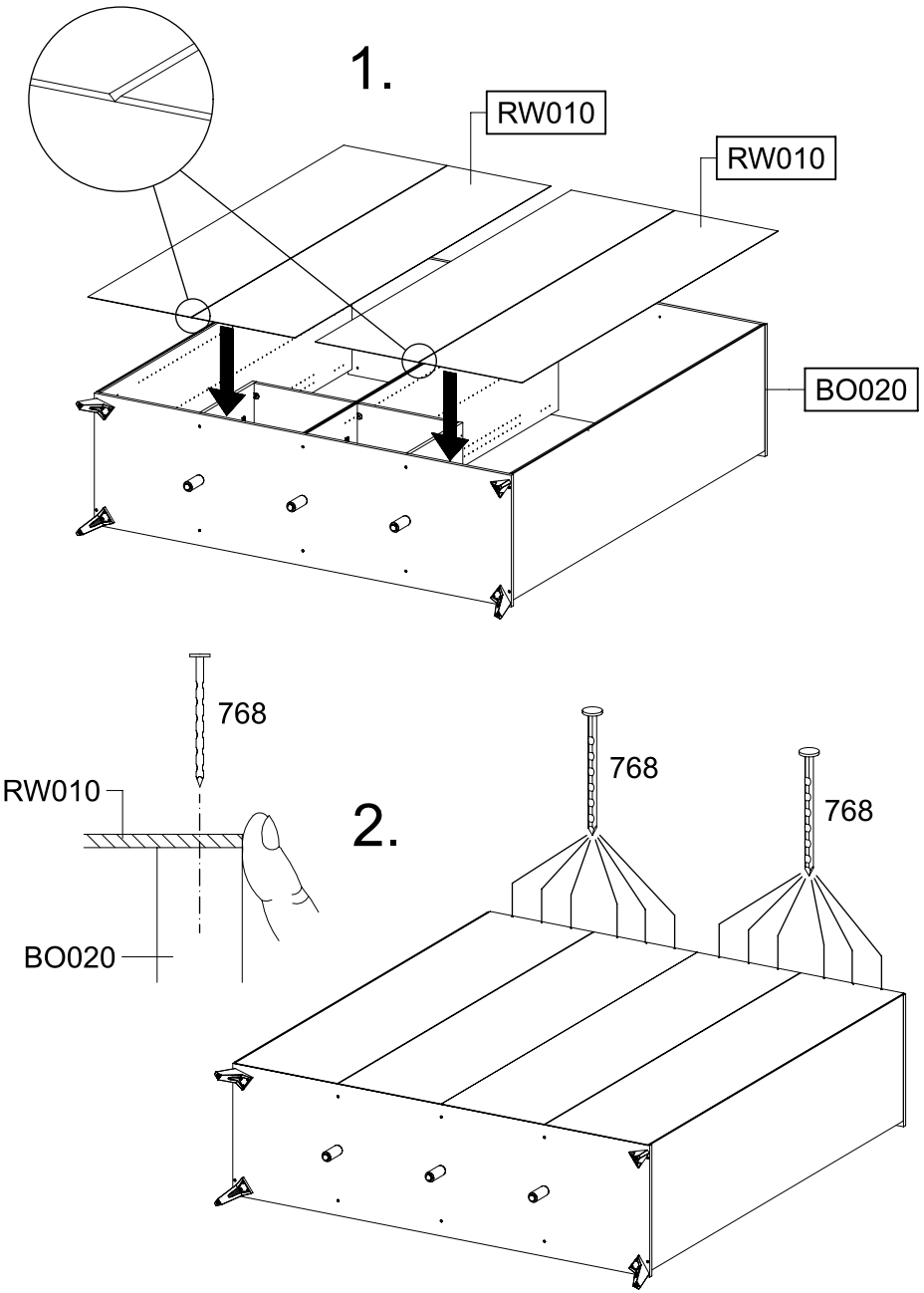

19

12x 768 1,5x25

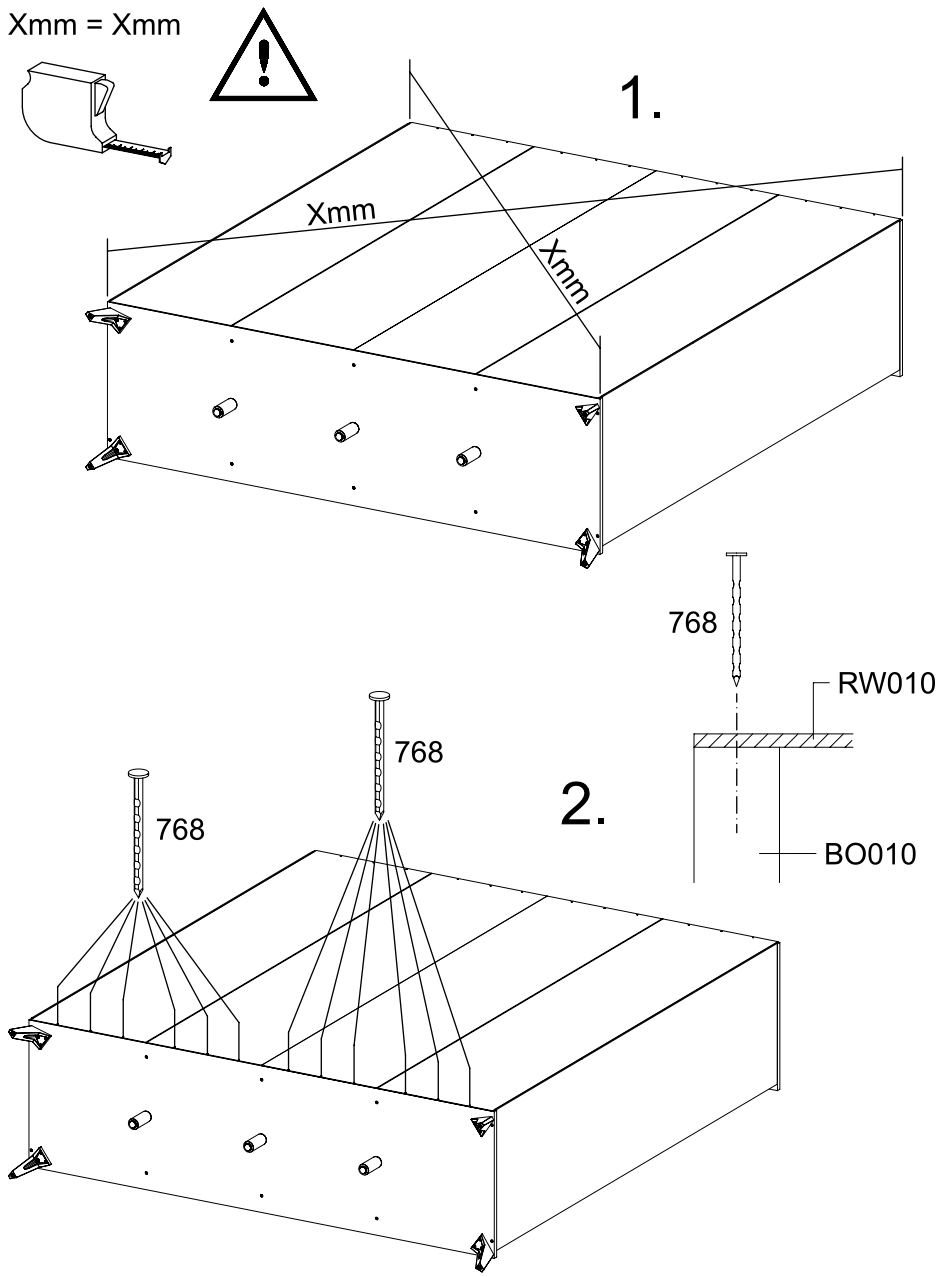

20 7x 215 3x20

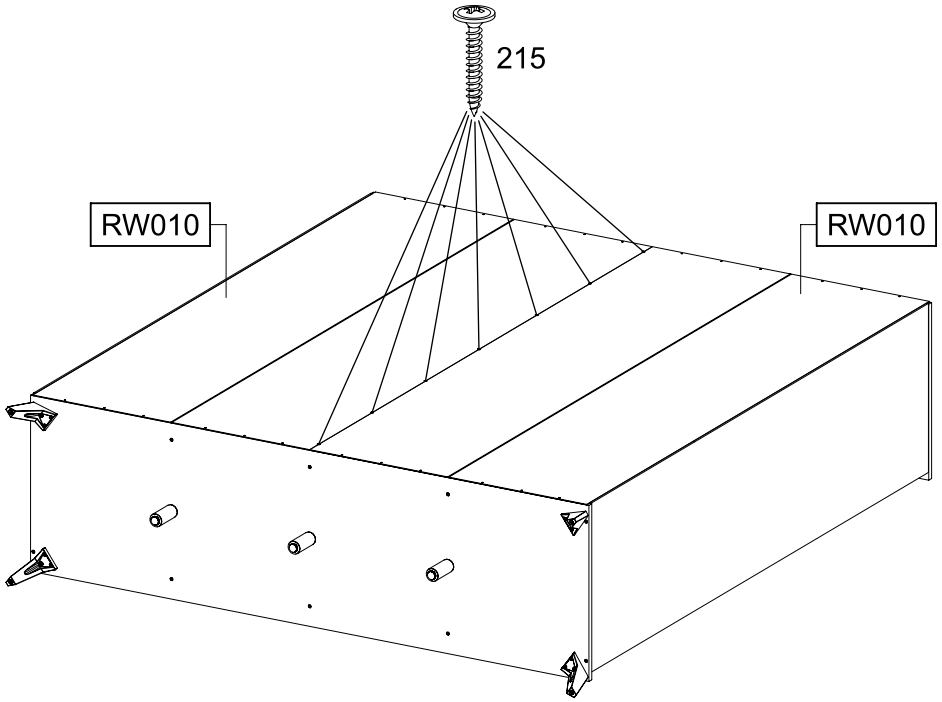

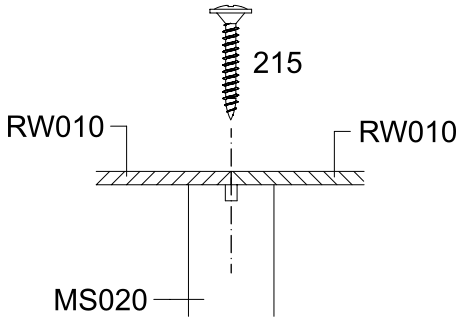

21 16x 768 1,5x25

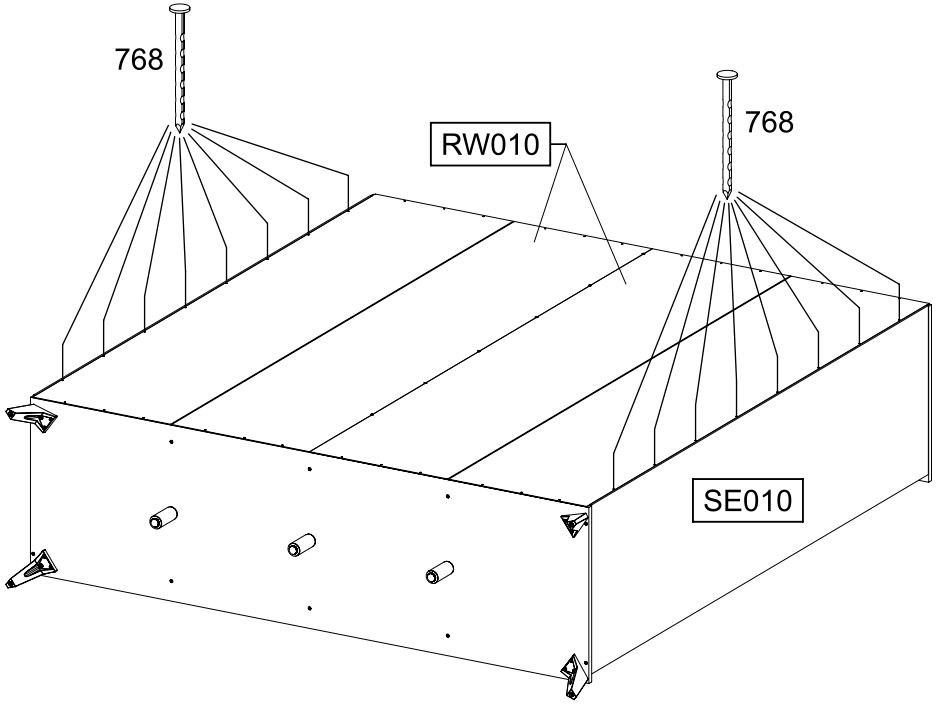

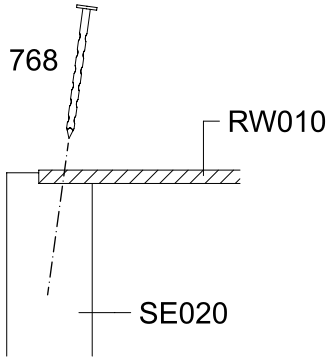

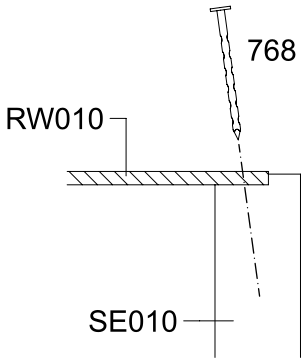

22

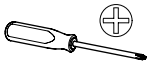

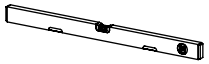

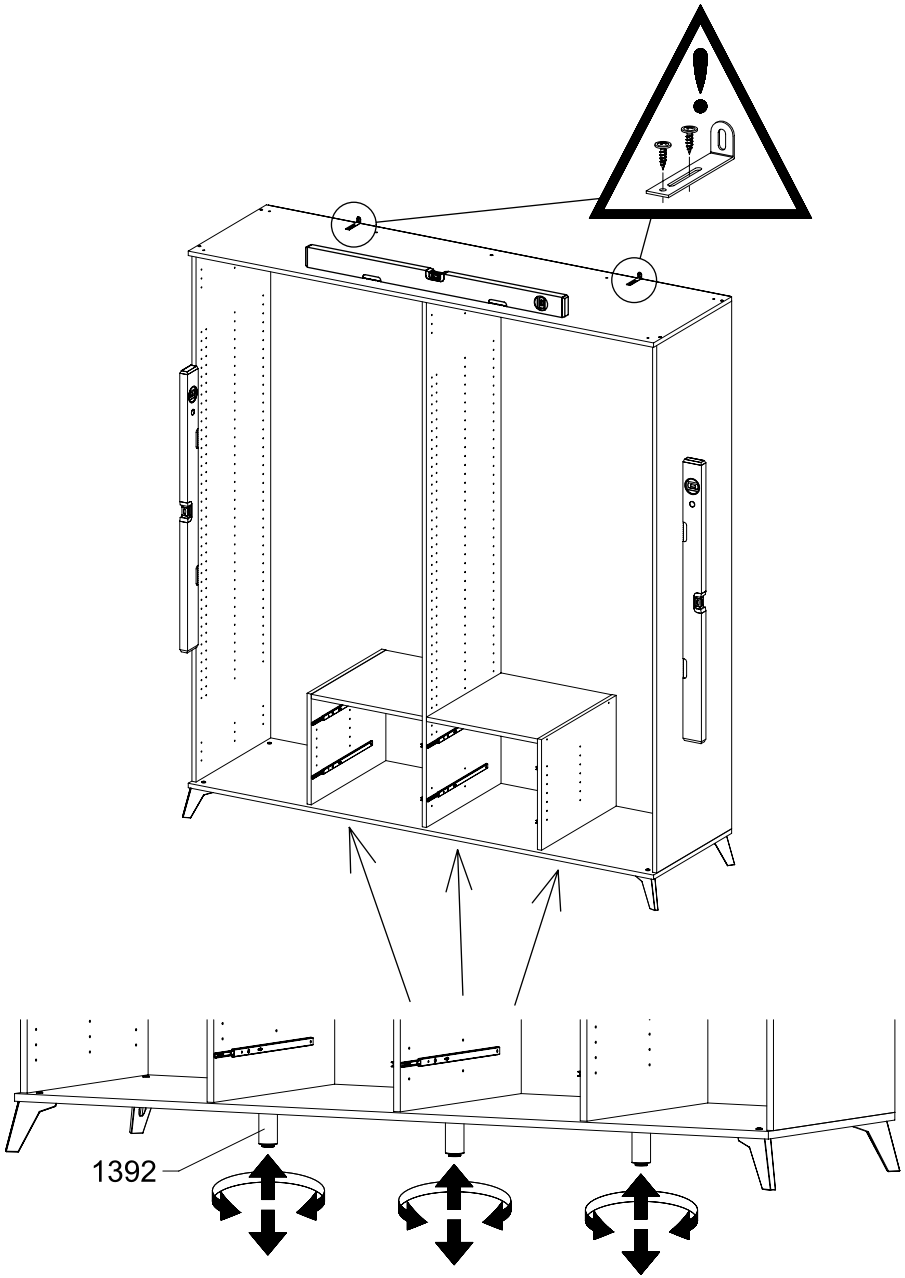

23

8x 405 Ø8

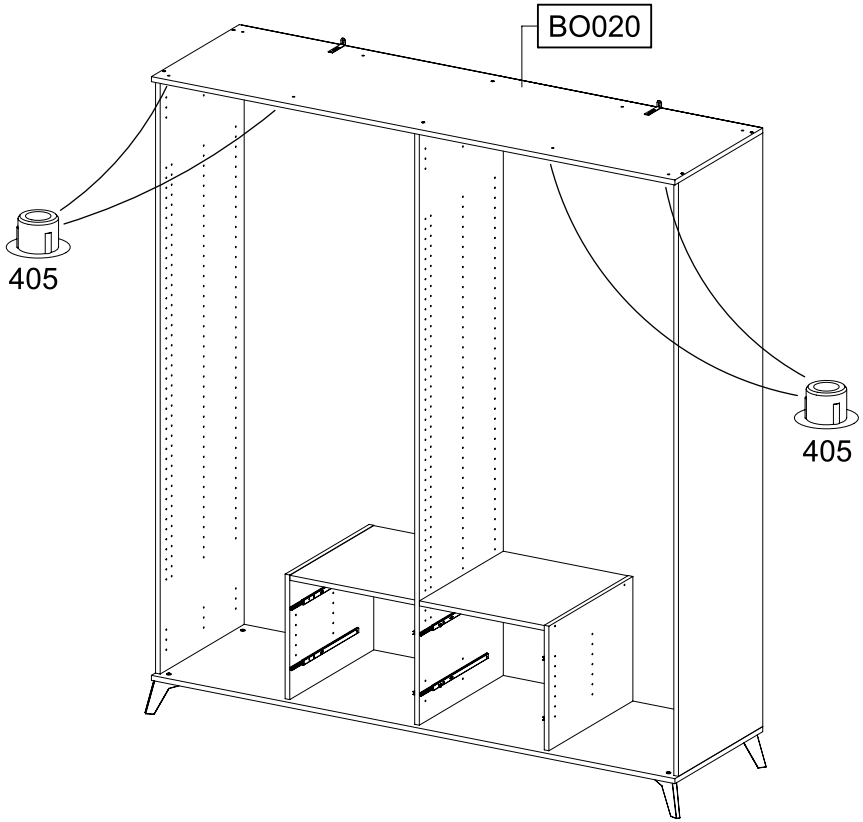

24

8x 568 M4x9

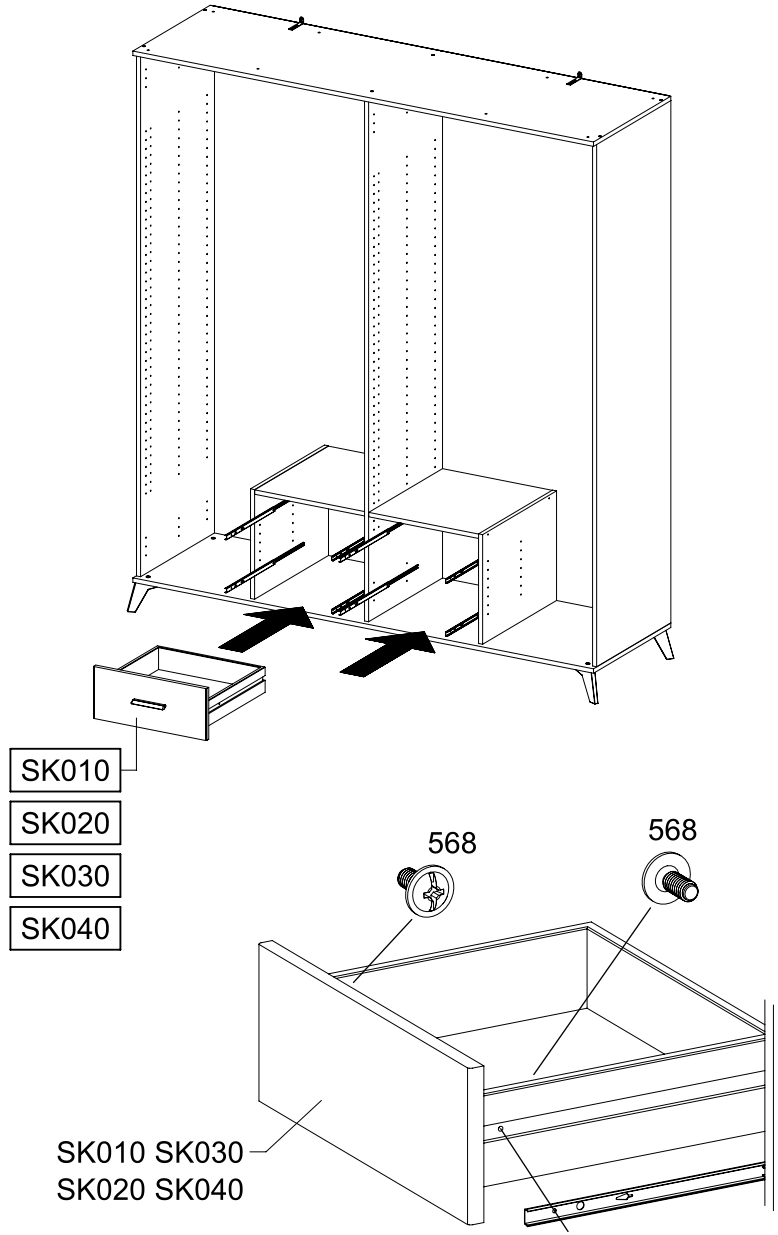

25

12x 116

VIDEO

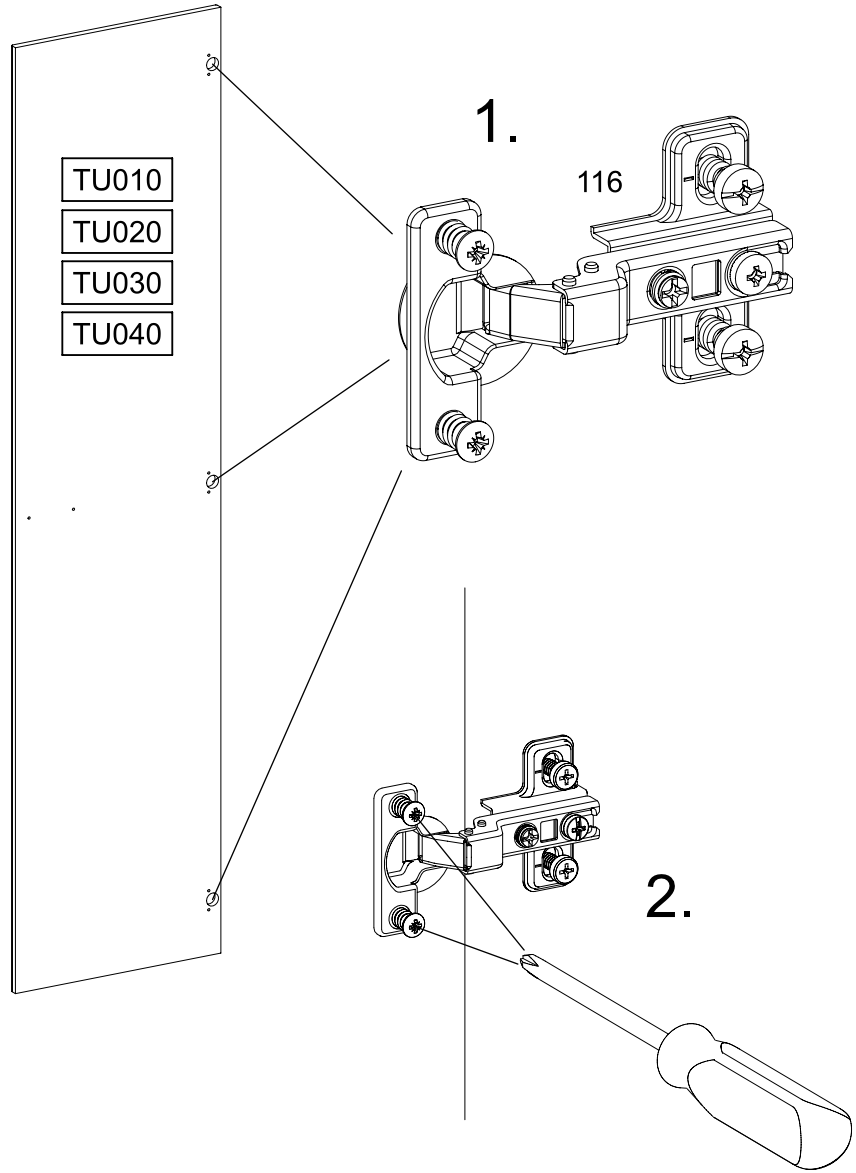

26

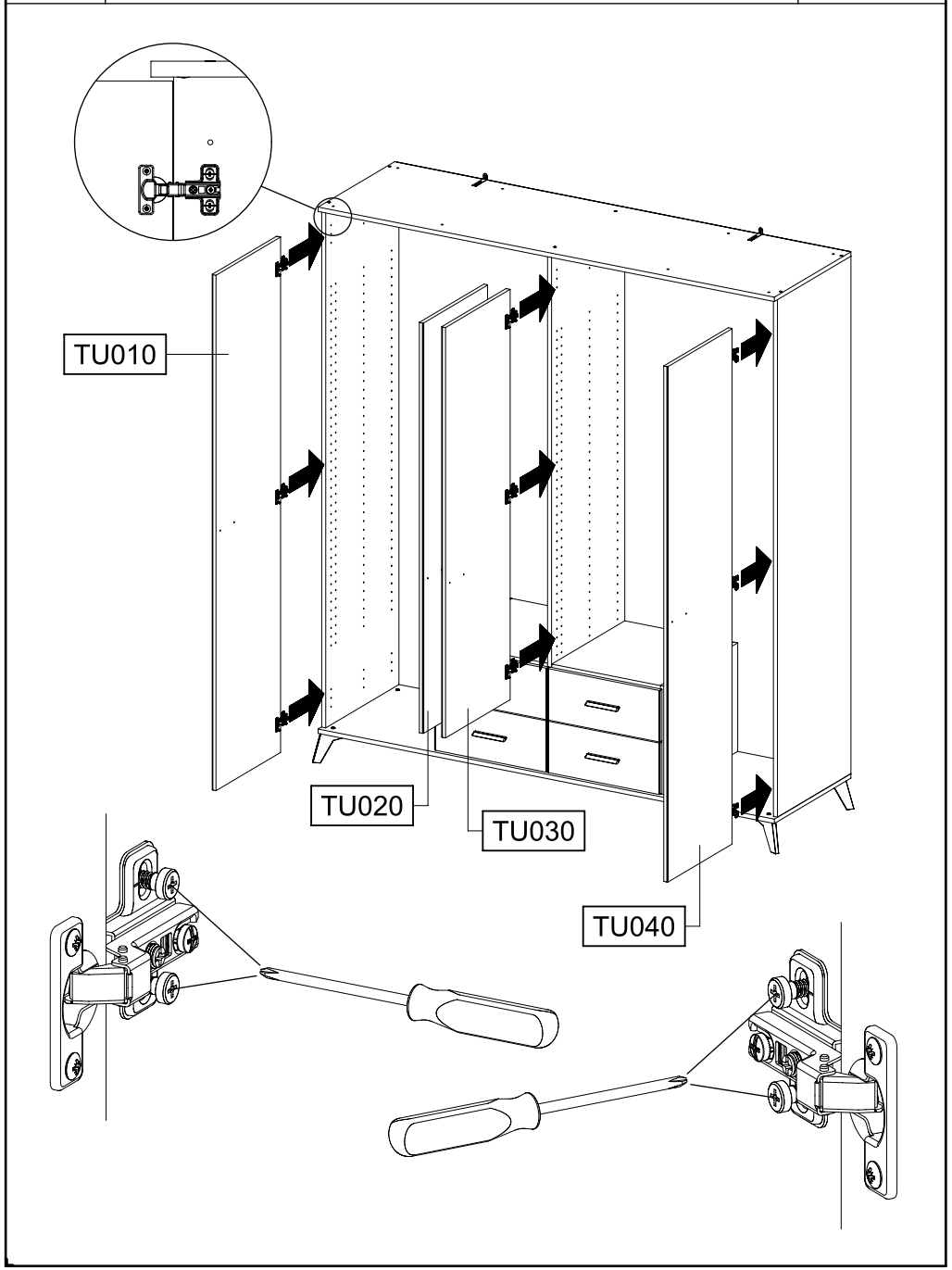

27

4x 427 4x20

2x 769 34x14,5x12

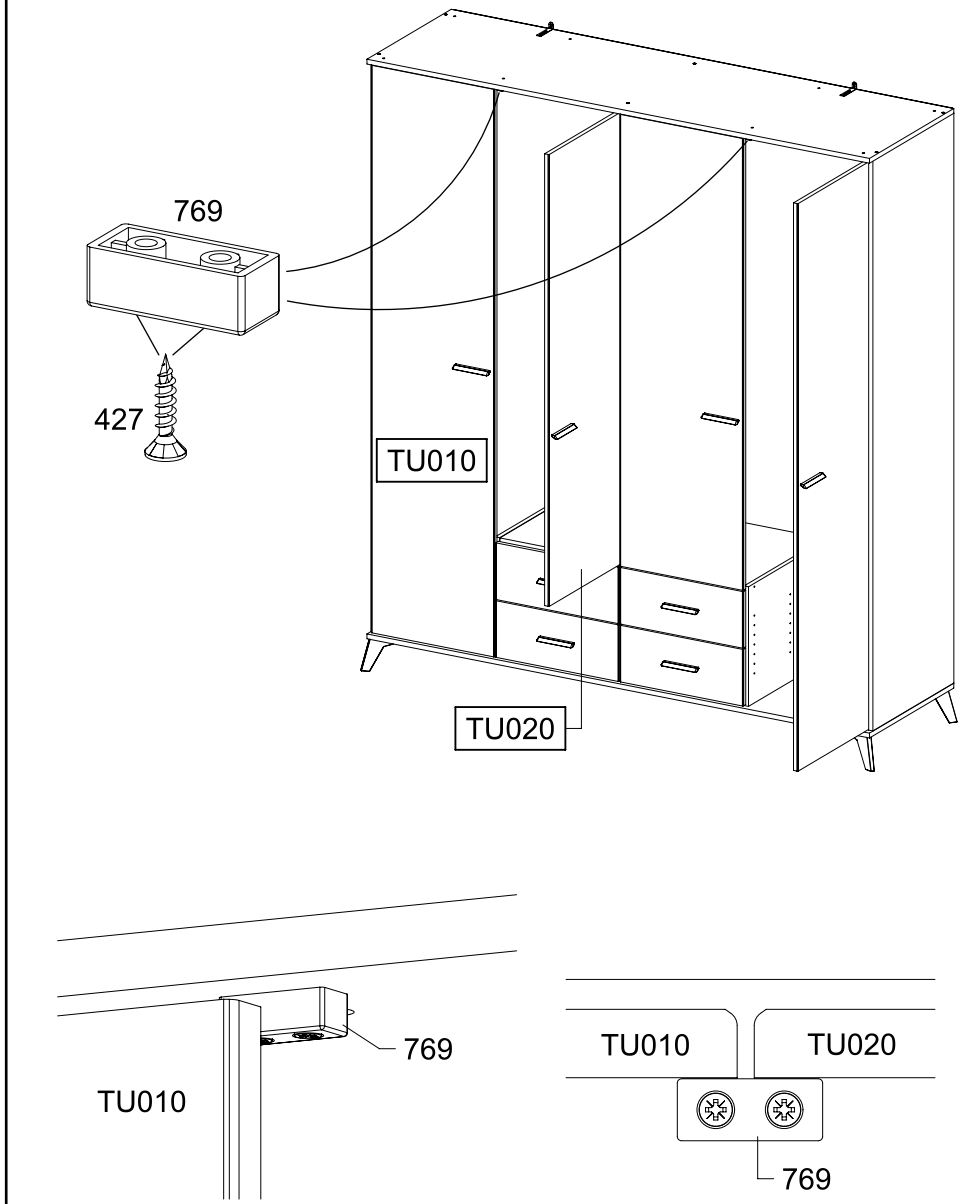

28
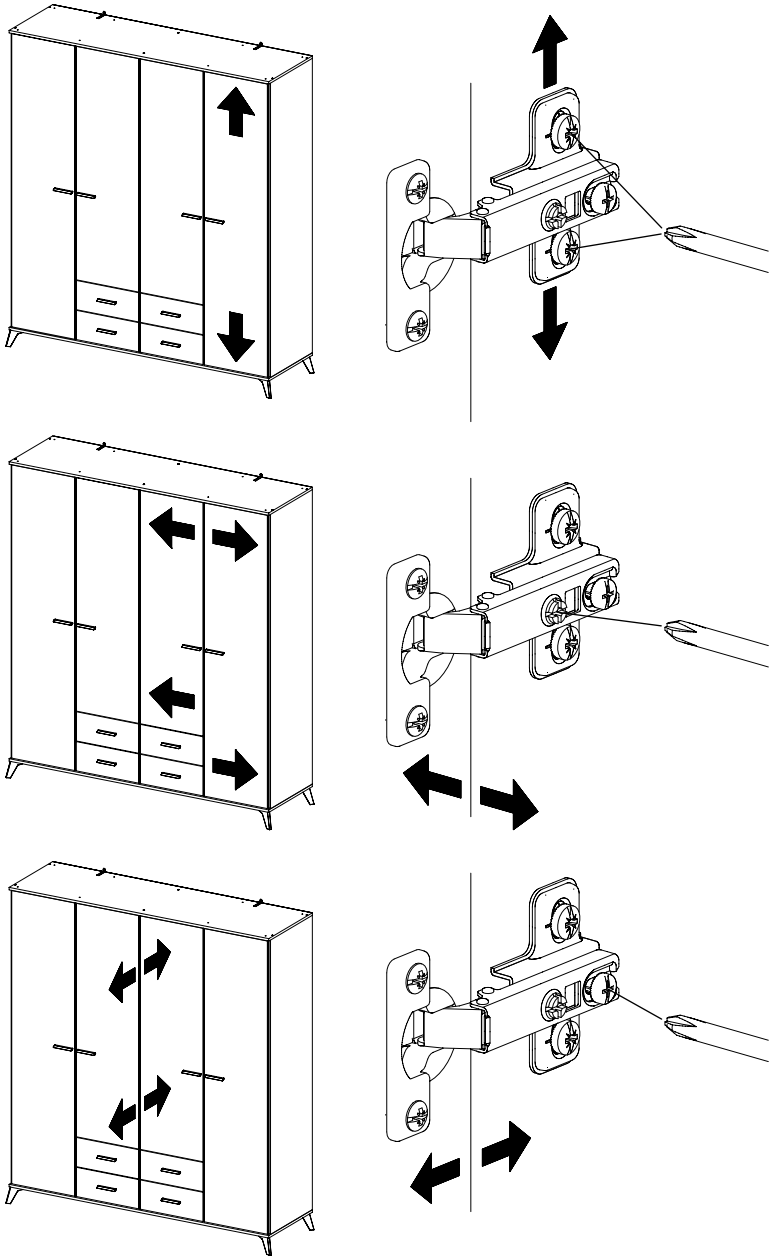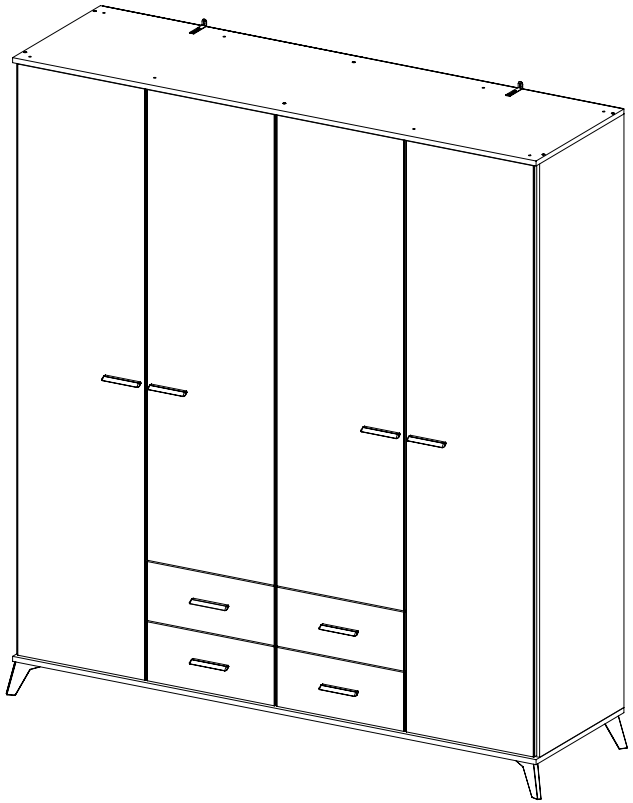
VIDEO