M2879_01

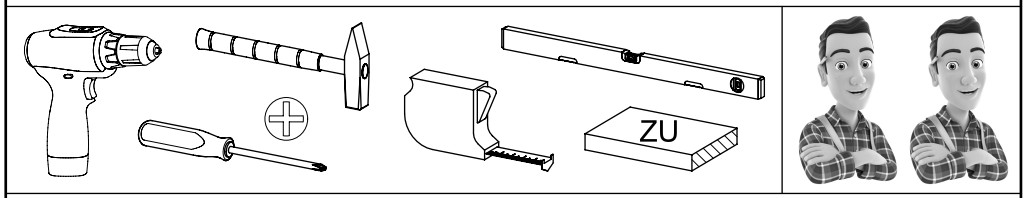

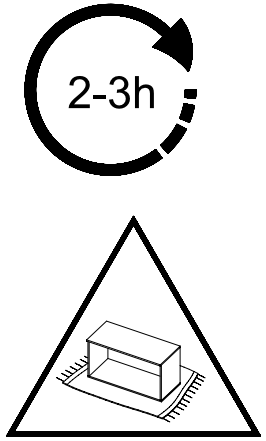

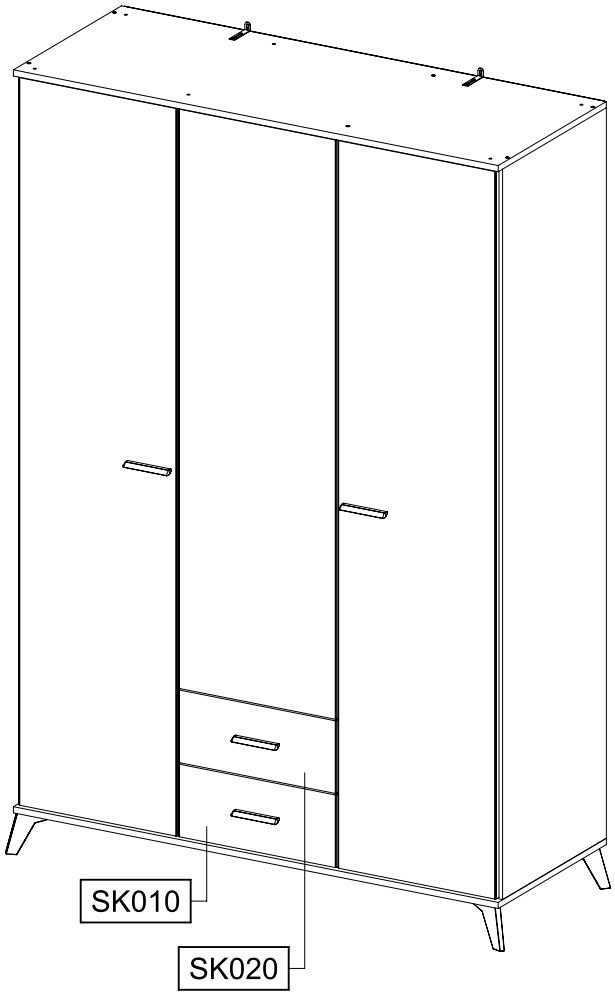

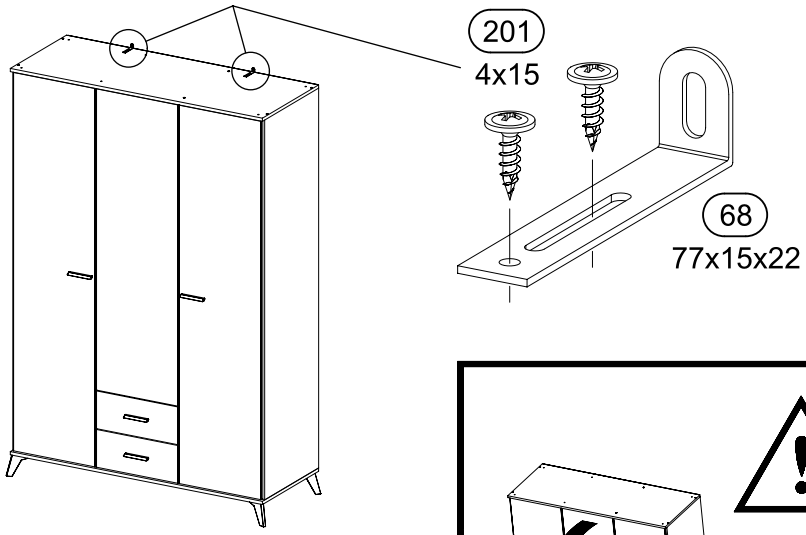

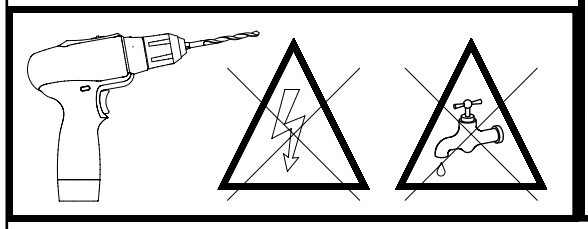

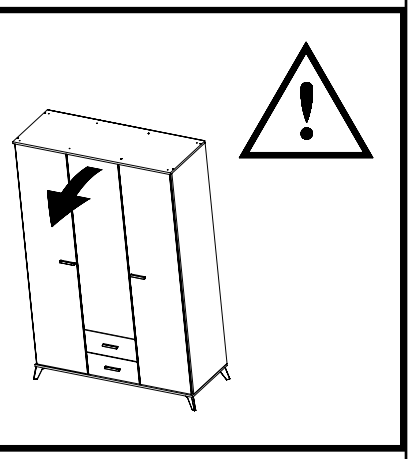

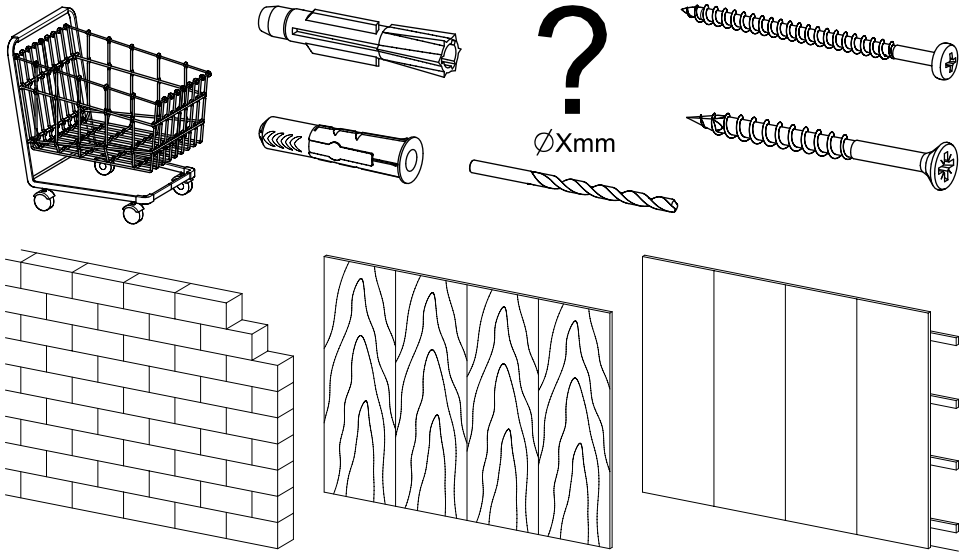

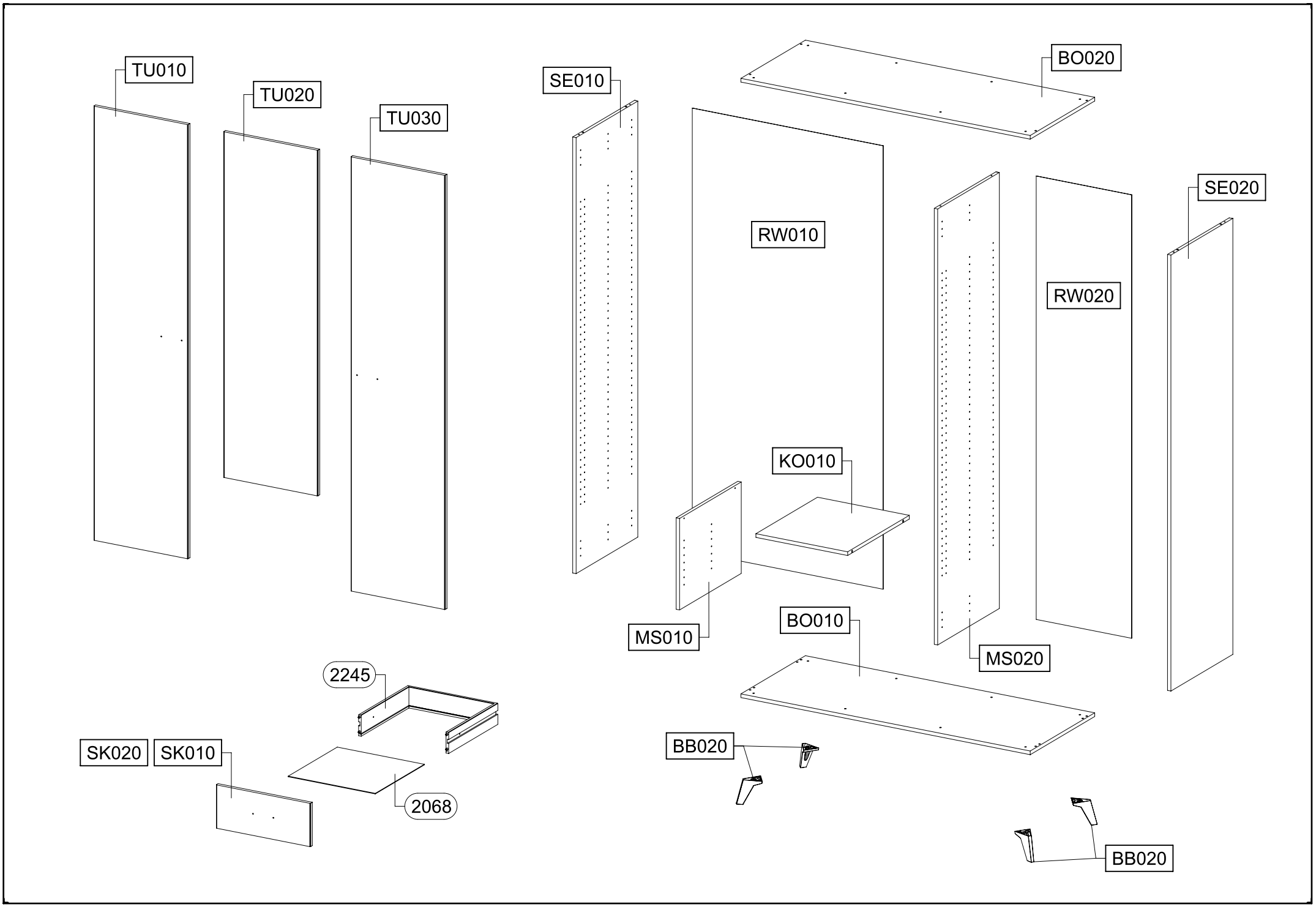
TU010
TU020
TU030
SE010
BO020
RW010
SE020
RW020
KO010
MS010
BO010
MS020
2245
SK020
SK010
2068
BB020
BB020

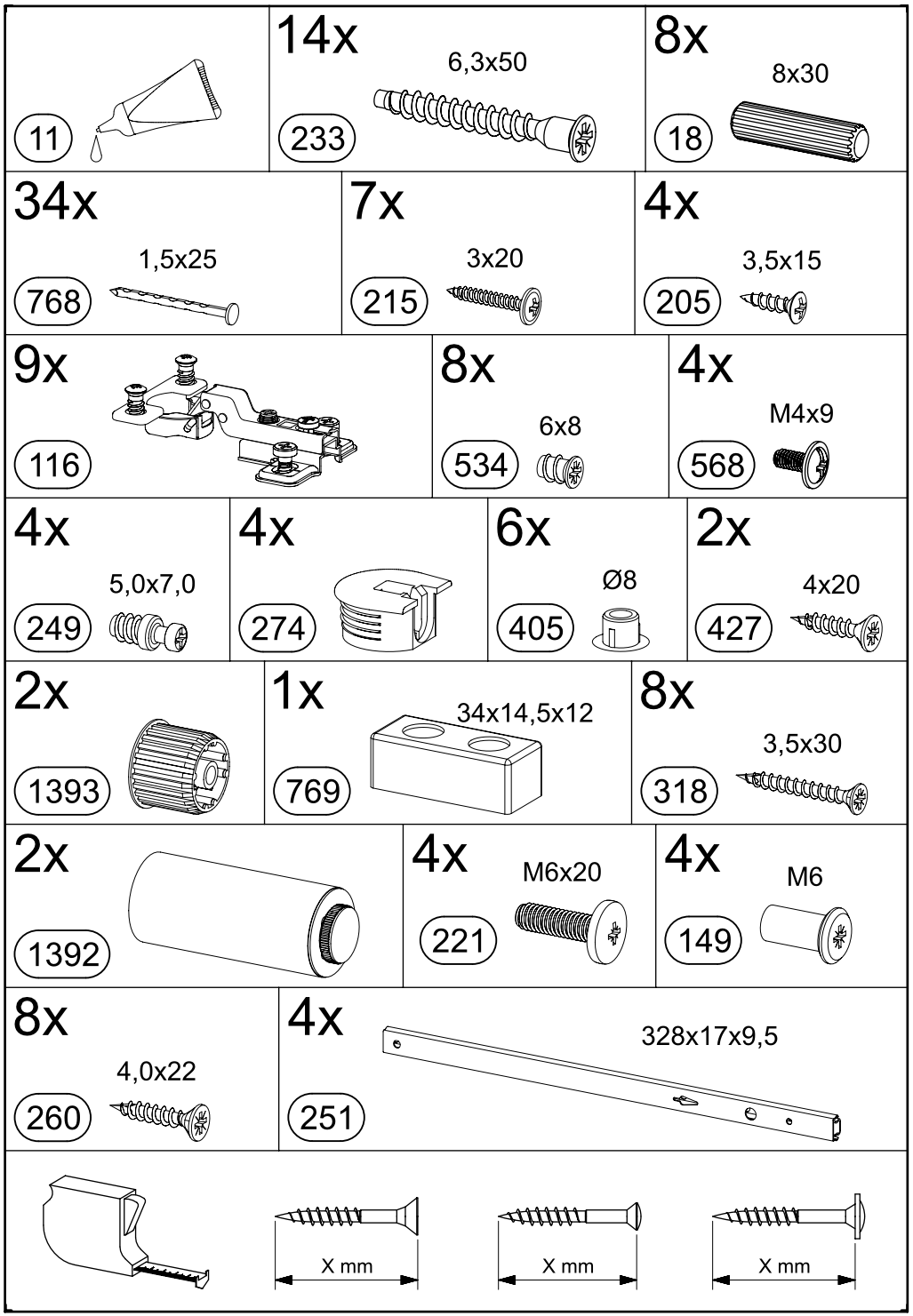
11
14x
6,3x50
233
8x
8x30
18
34x
1,5x25
768
7x
3x20
215
4x
3,5x15
205
9x
116
8x
6x8
534
4x
M4x9
568
4x
5,0x7,0
249
4x
274
6x
Ø8
405
2x
4x20
427
2x
1393
1x
34x14,5x12
769
8x
3,5x30
318
2x
1392
4x
M6x20
221
4x
M6
149
8x
4,0x22
260
4x
328x17x9,5
251
X mm
X mm
X mm

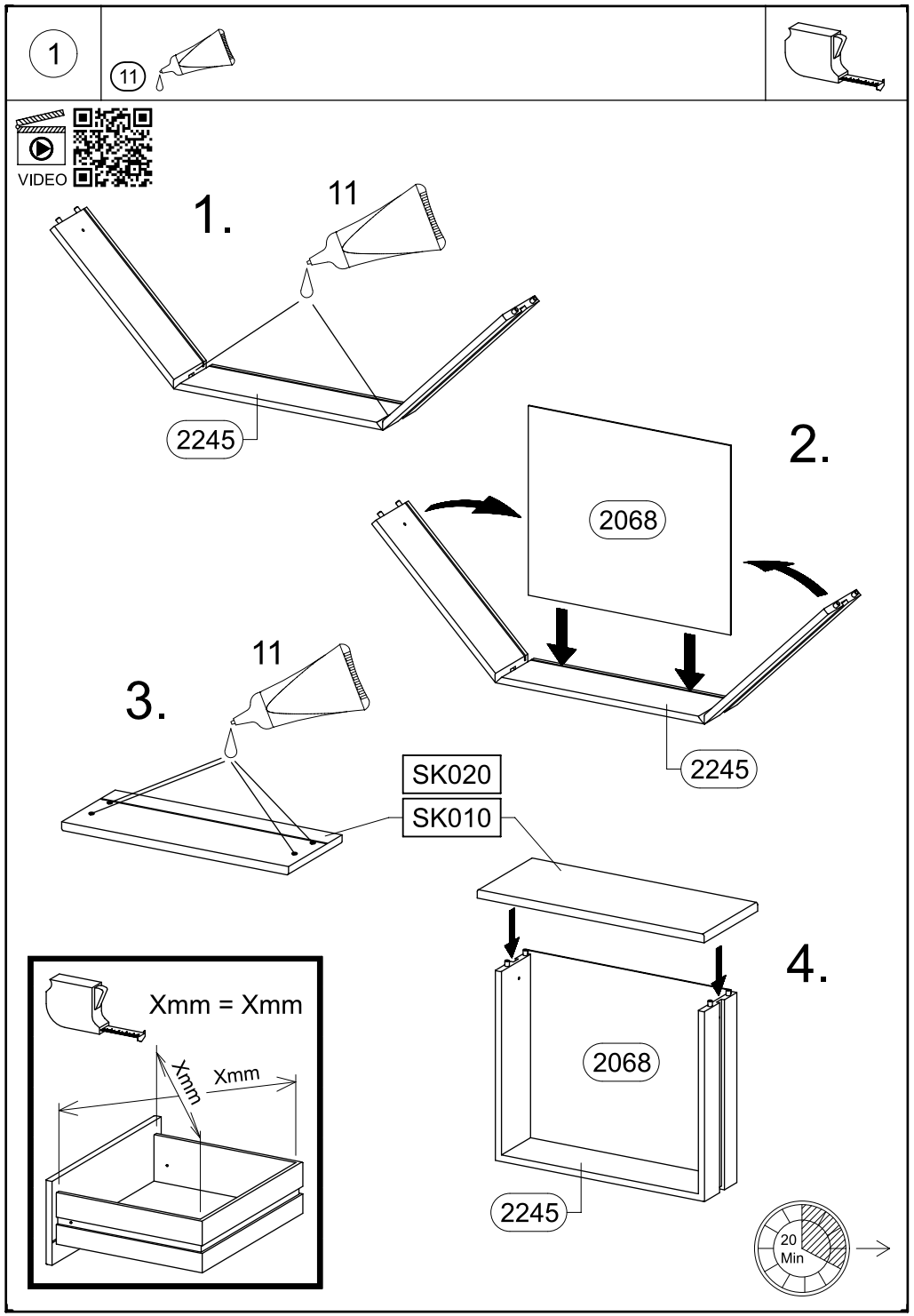
1
11
VIDEO
1.
11
2245
2.
2068
2245
3.
11
SK020
SK010
4.
2068
2245
Xmm = Xmm
Xmm
Xmm
20
Min

2

8x 18 8x30

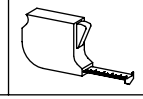

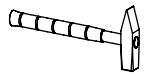

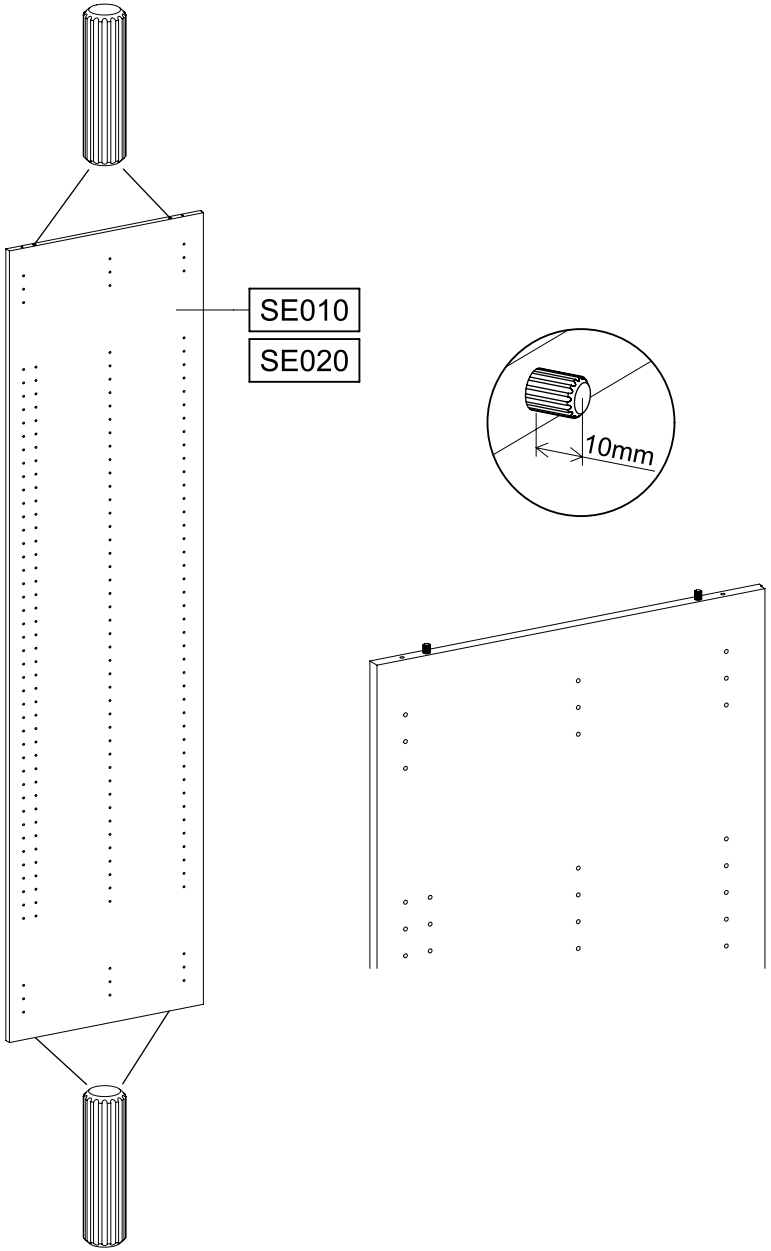

3

2x 249 5,0x7,0

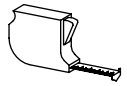

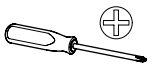

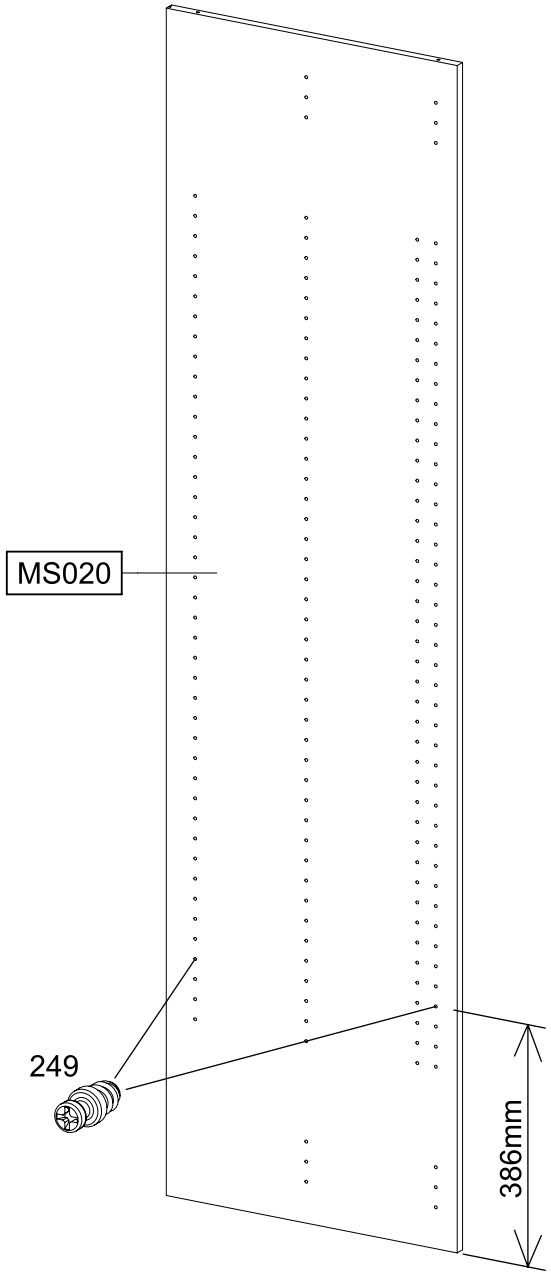

4

2x 251 328x17x9,5

4x 534 6x8

2x 205 3,5x15

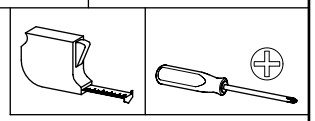

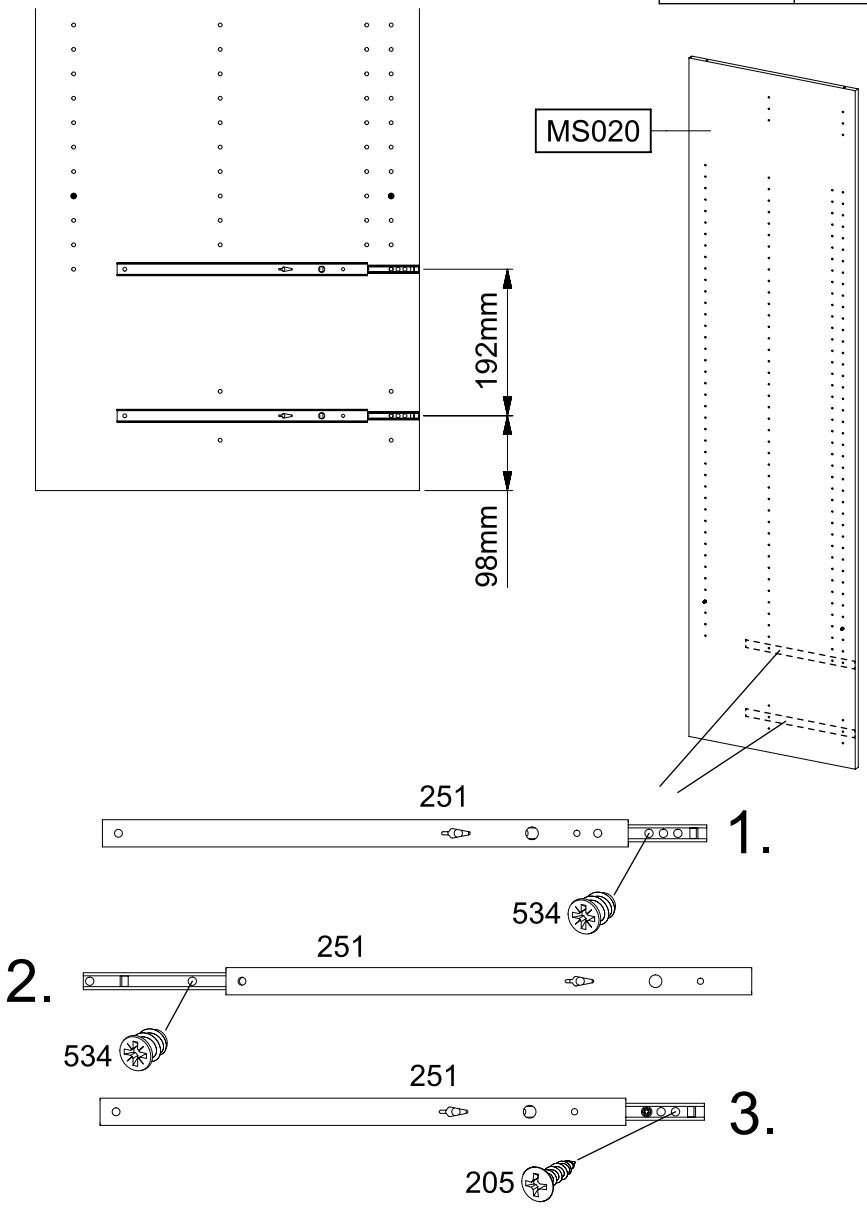

5

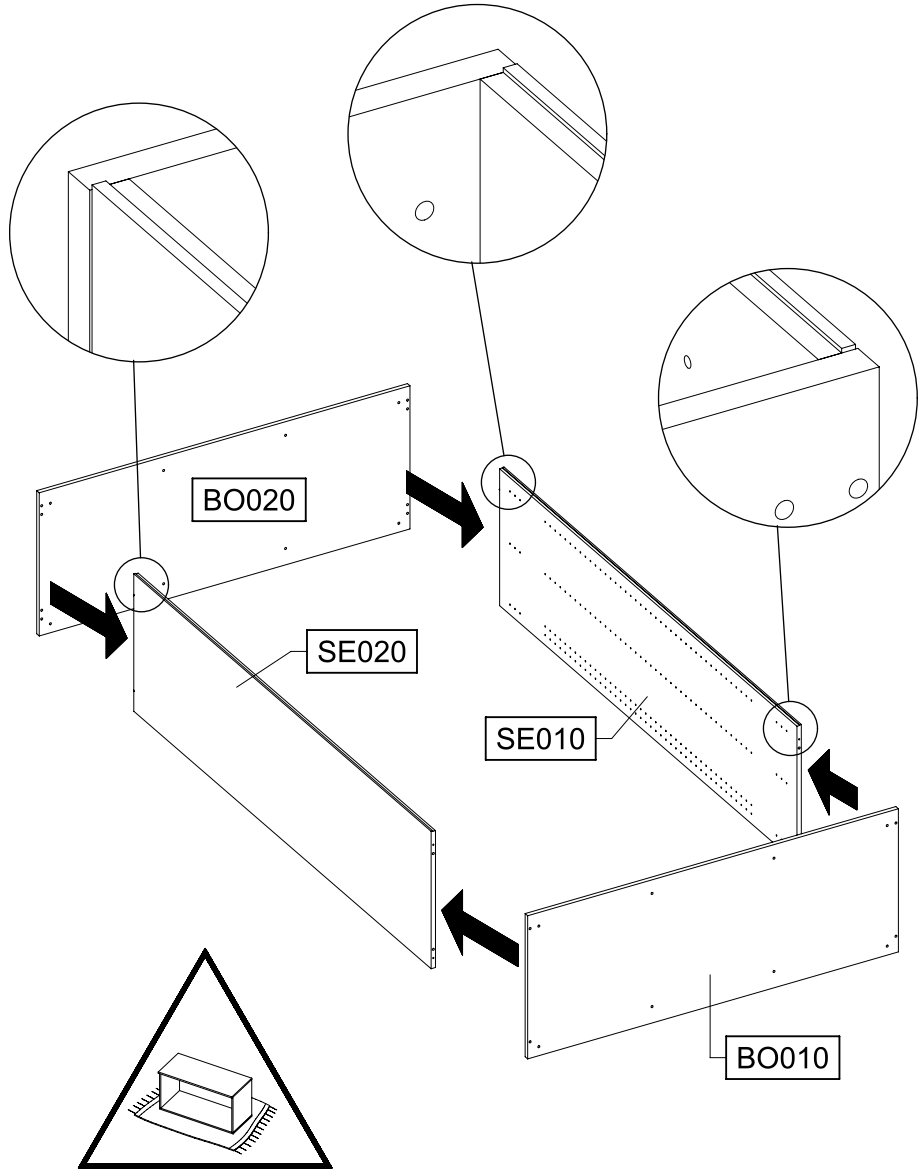

6

8x 233 6,3x50

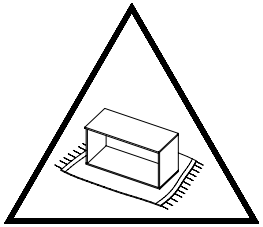

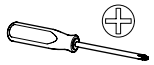

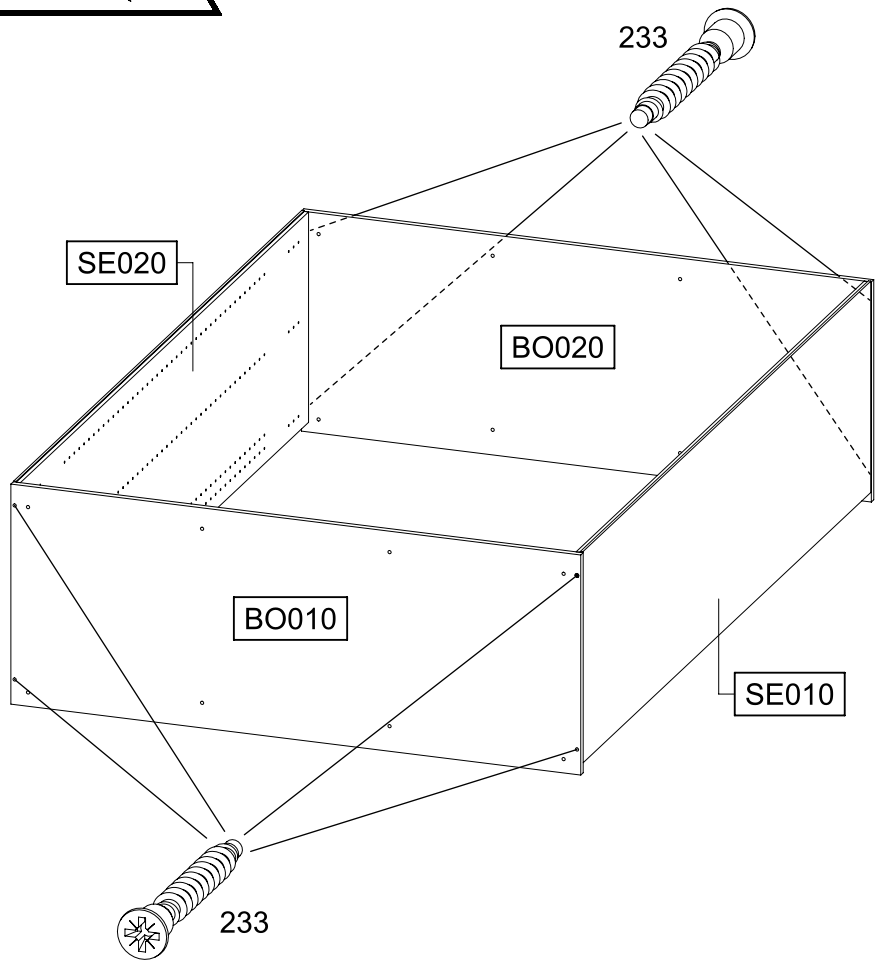

7

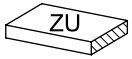

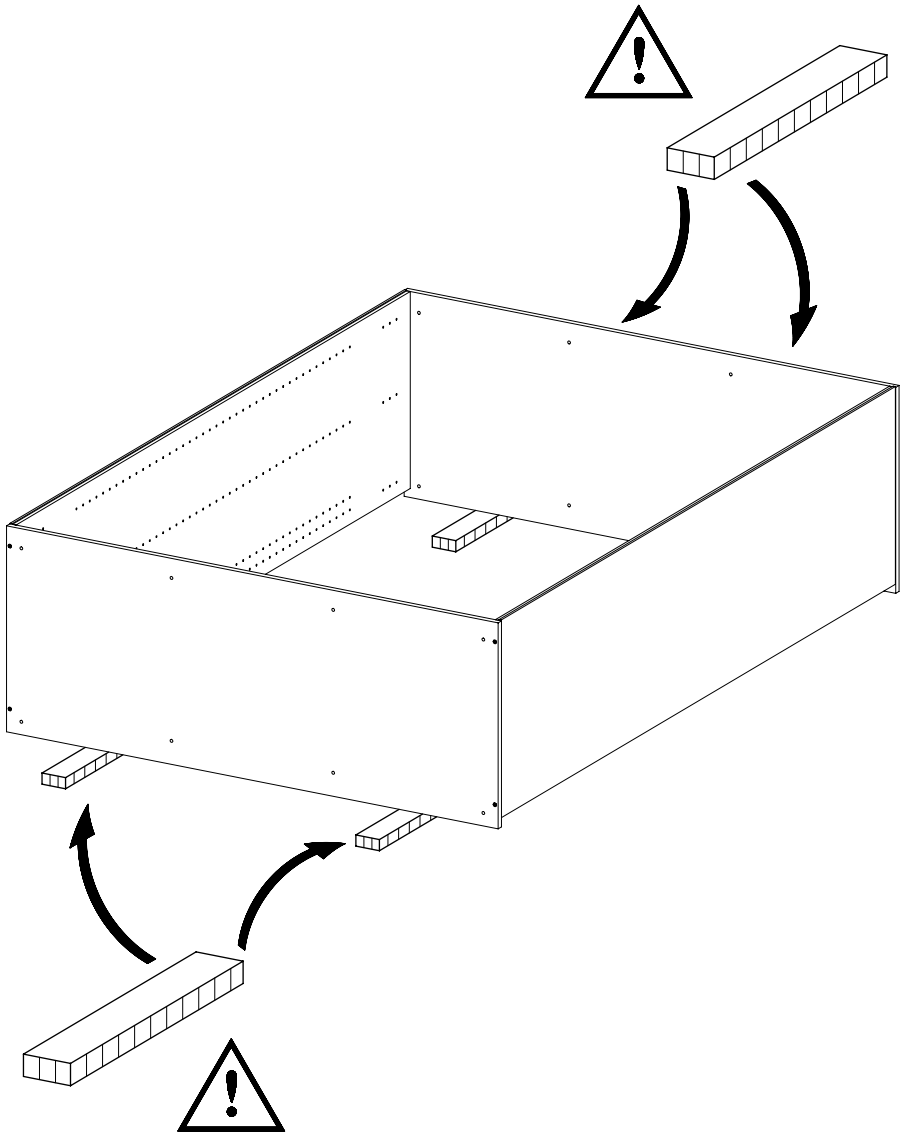

8

4x 233 6,3x50

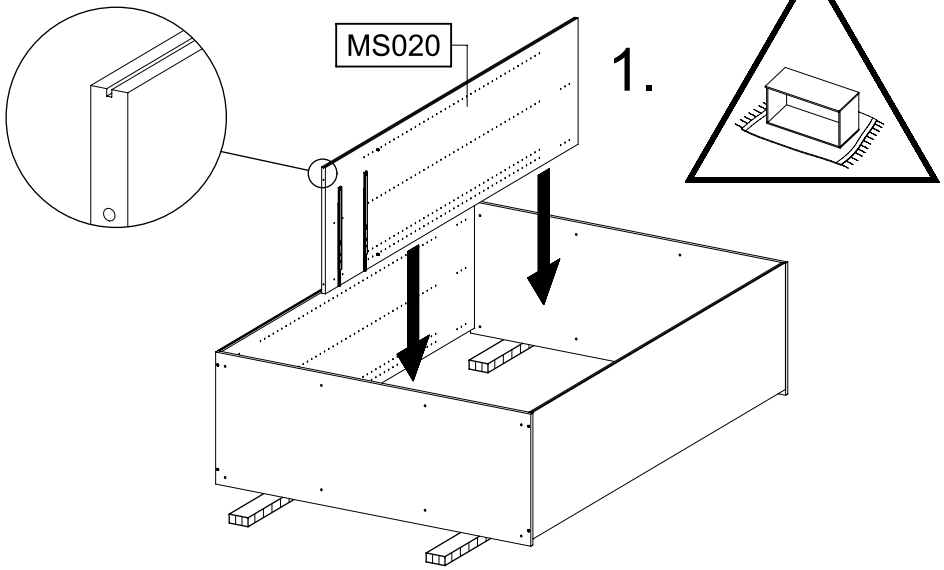

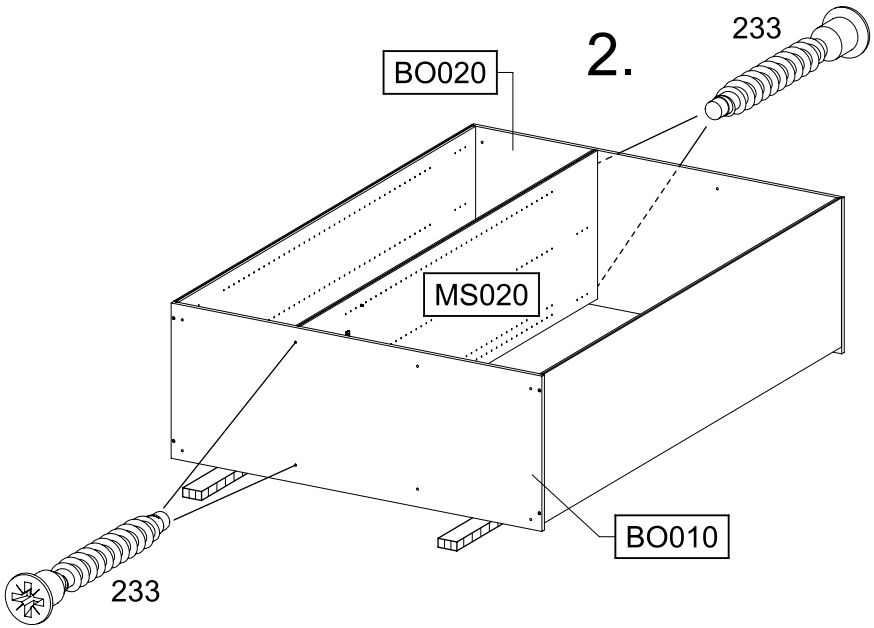

9

2x 251 328x17x9,5

4x 534 6x8

2x 205 3,5x15

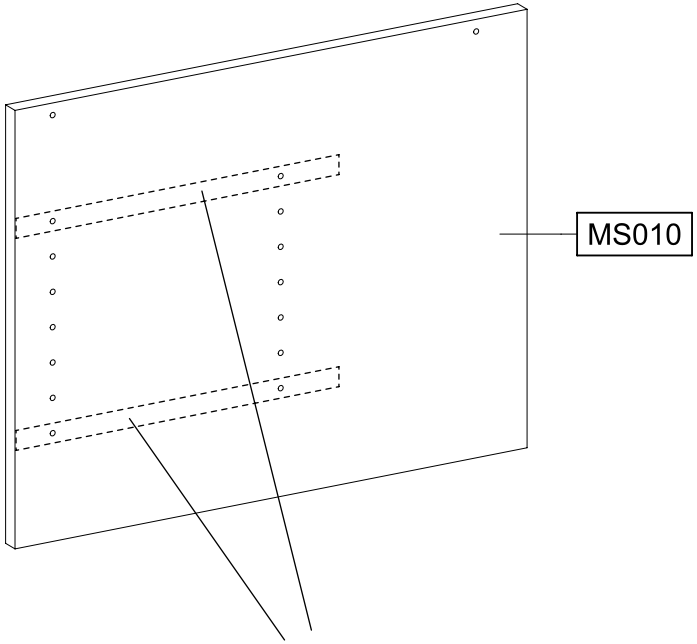

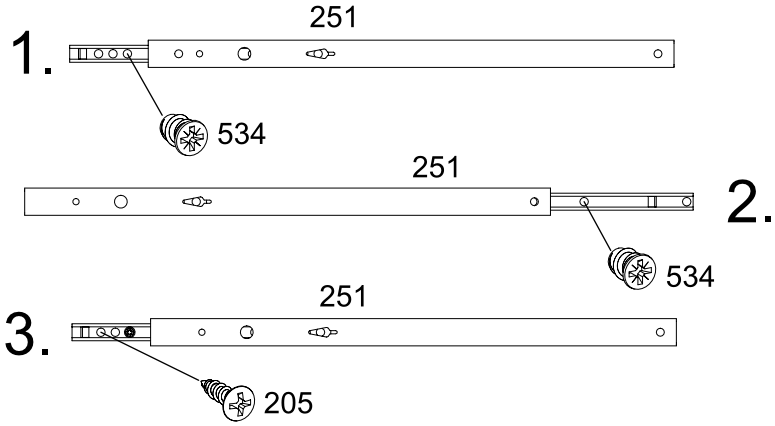

10

2x 249 5,0x7,0

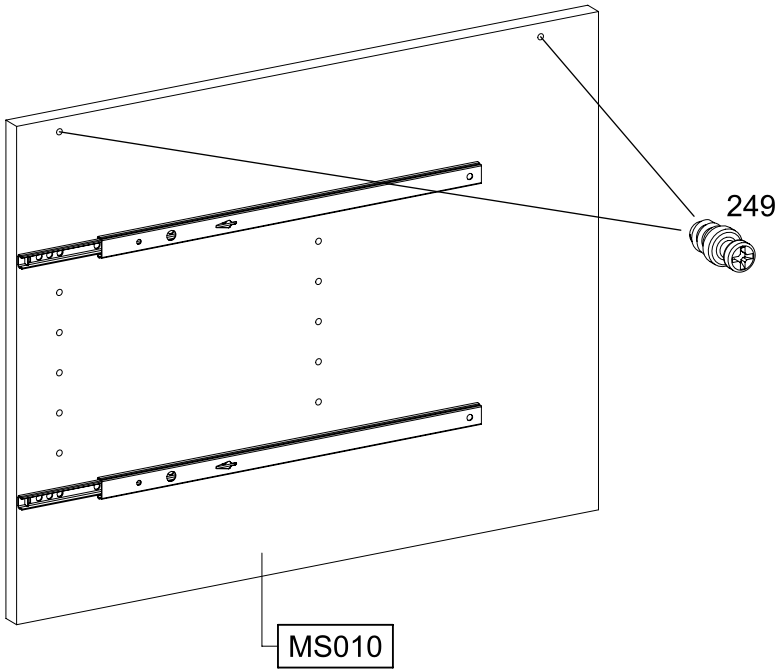

11

2x 233 6,3x50

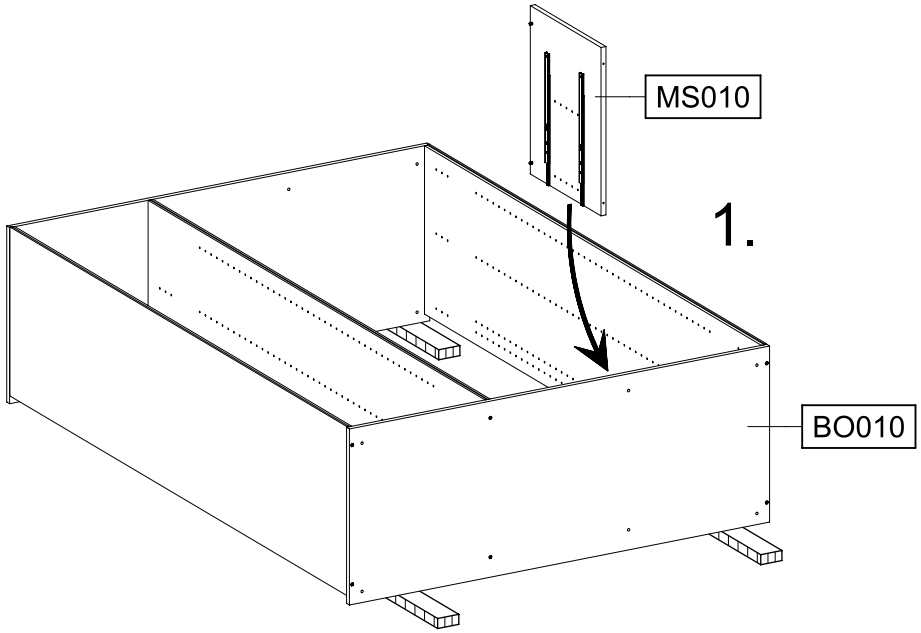

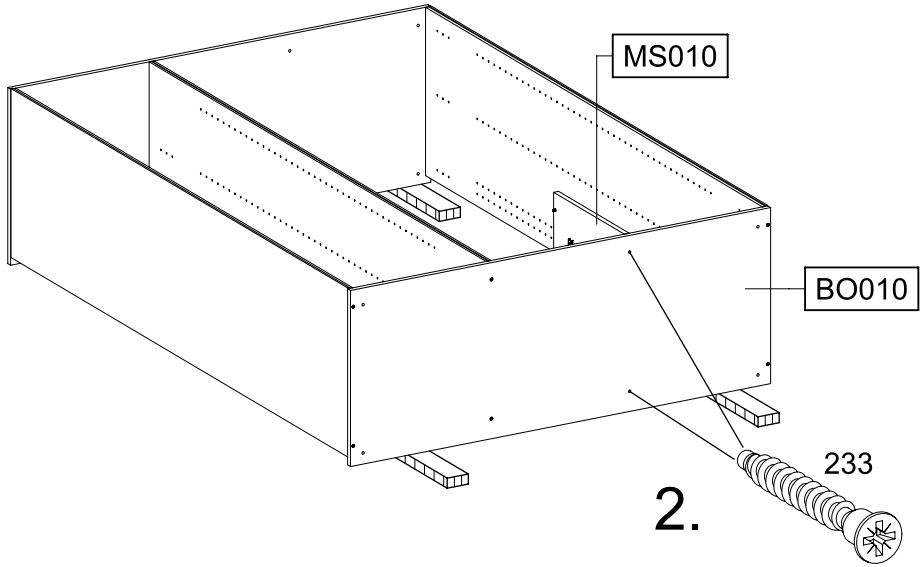

12

4x 274

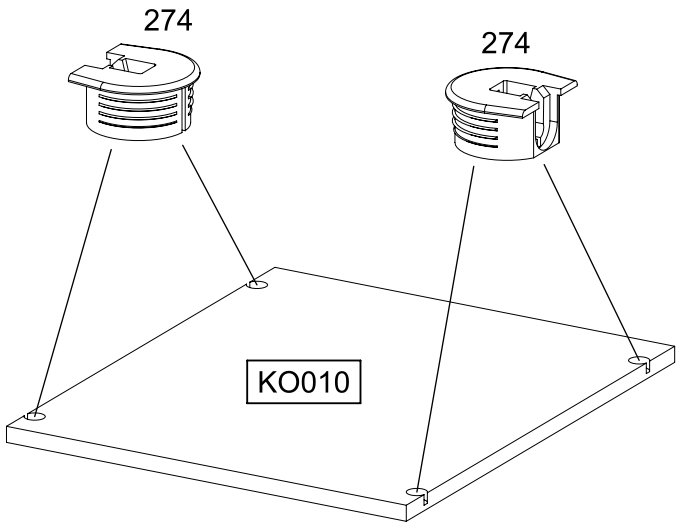

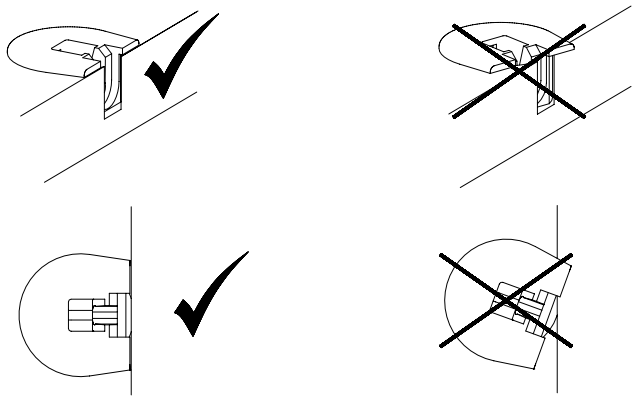

13

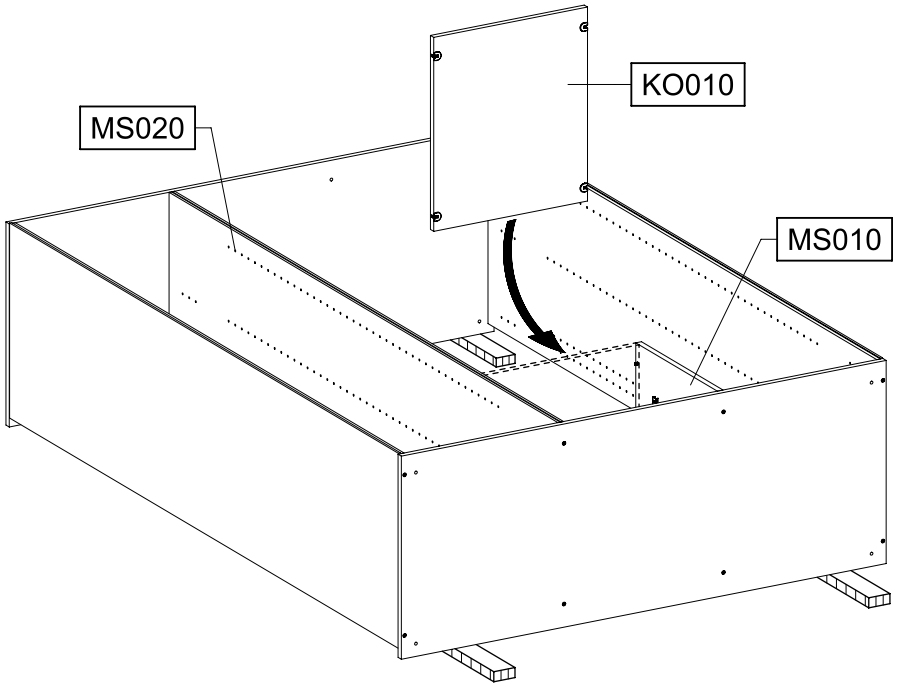

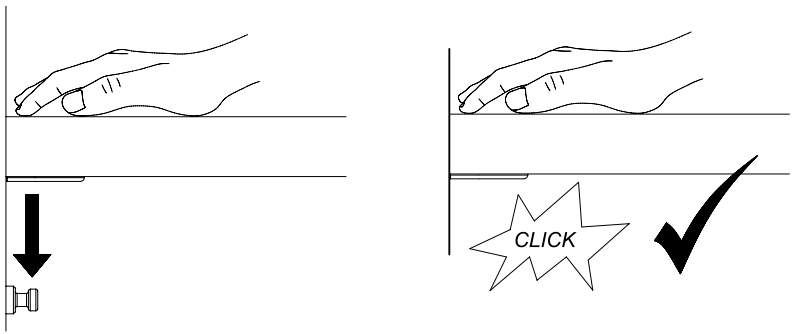

14

8x 318 3,5x30

2x 1392

2x 1393

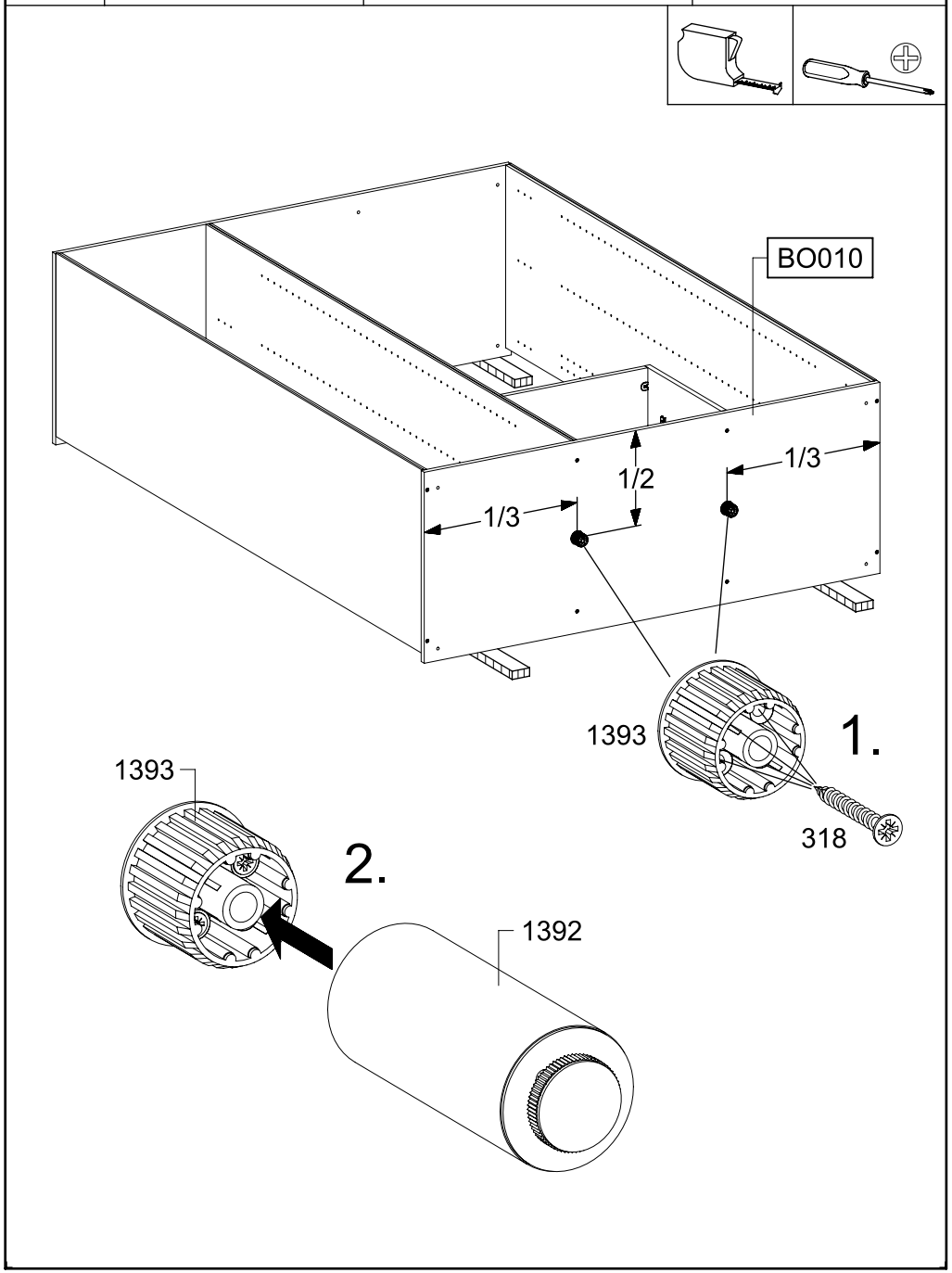

15

4x 221 M6x20

4x 149 M6

8x 260 4,0x22

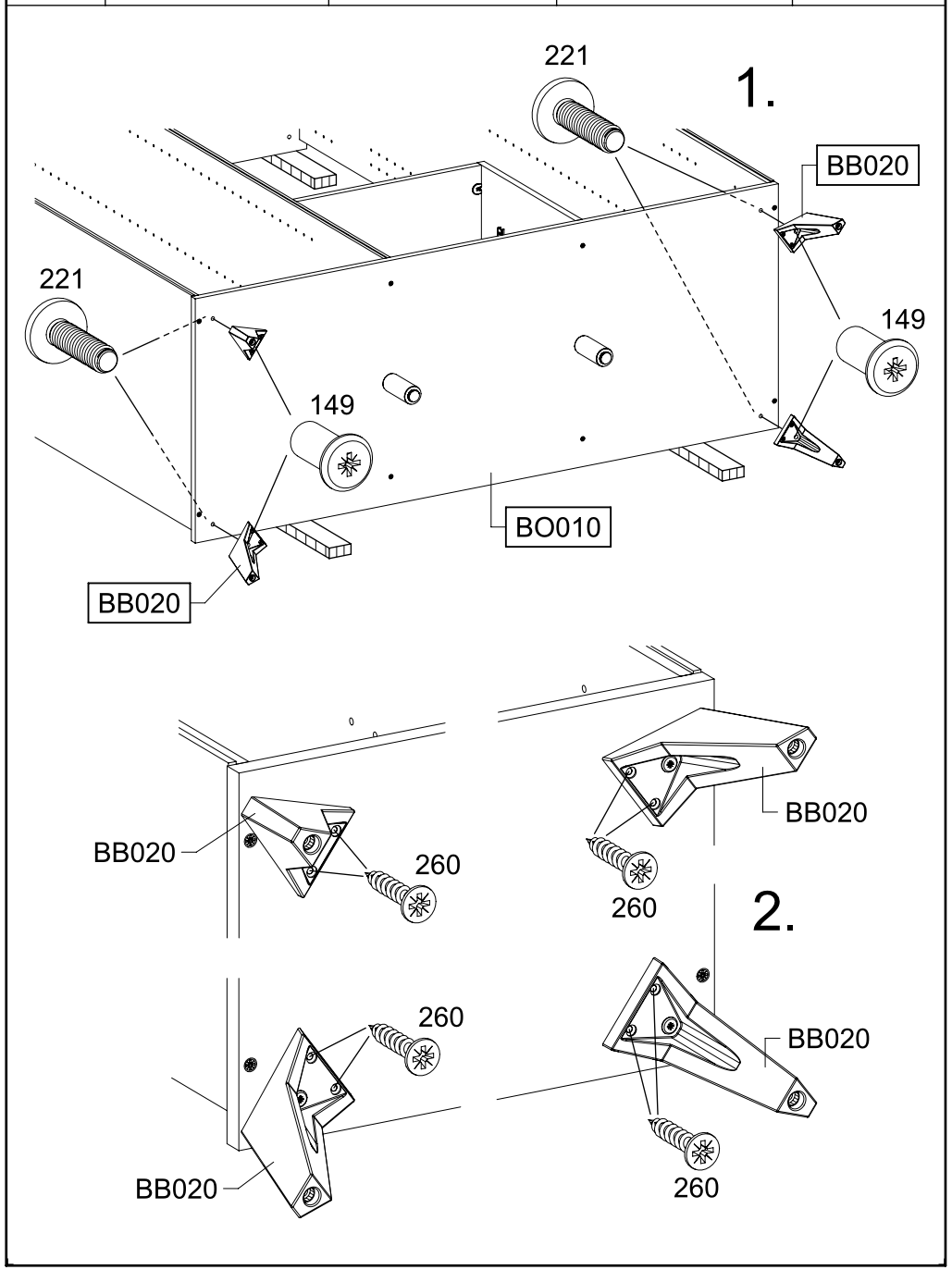

16

9x 768 1,5x25

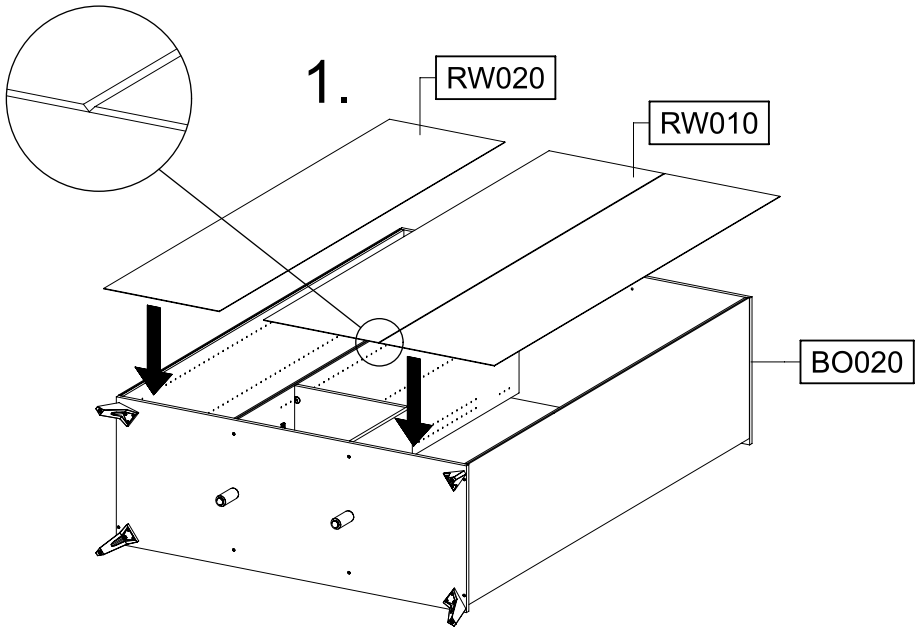

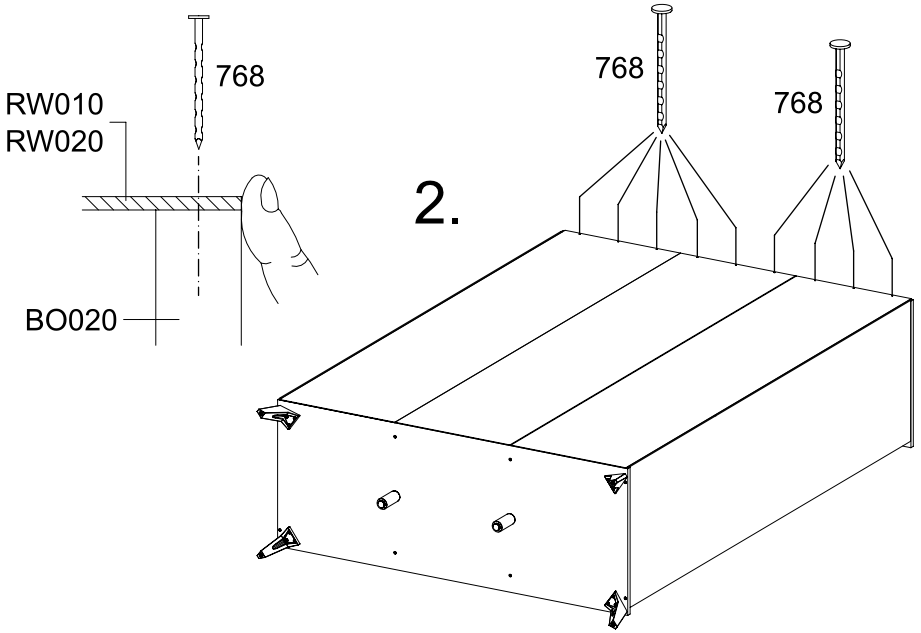

17

9x 768 1,5x25

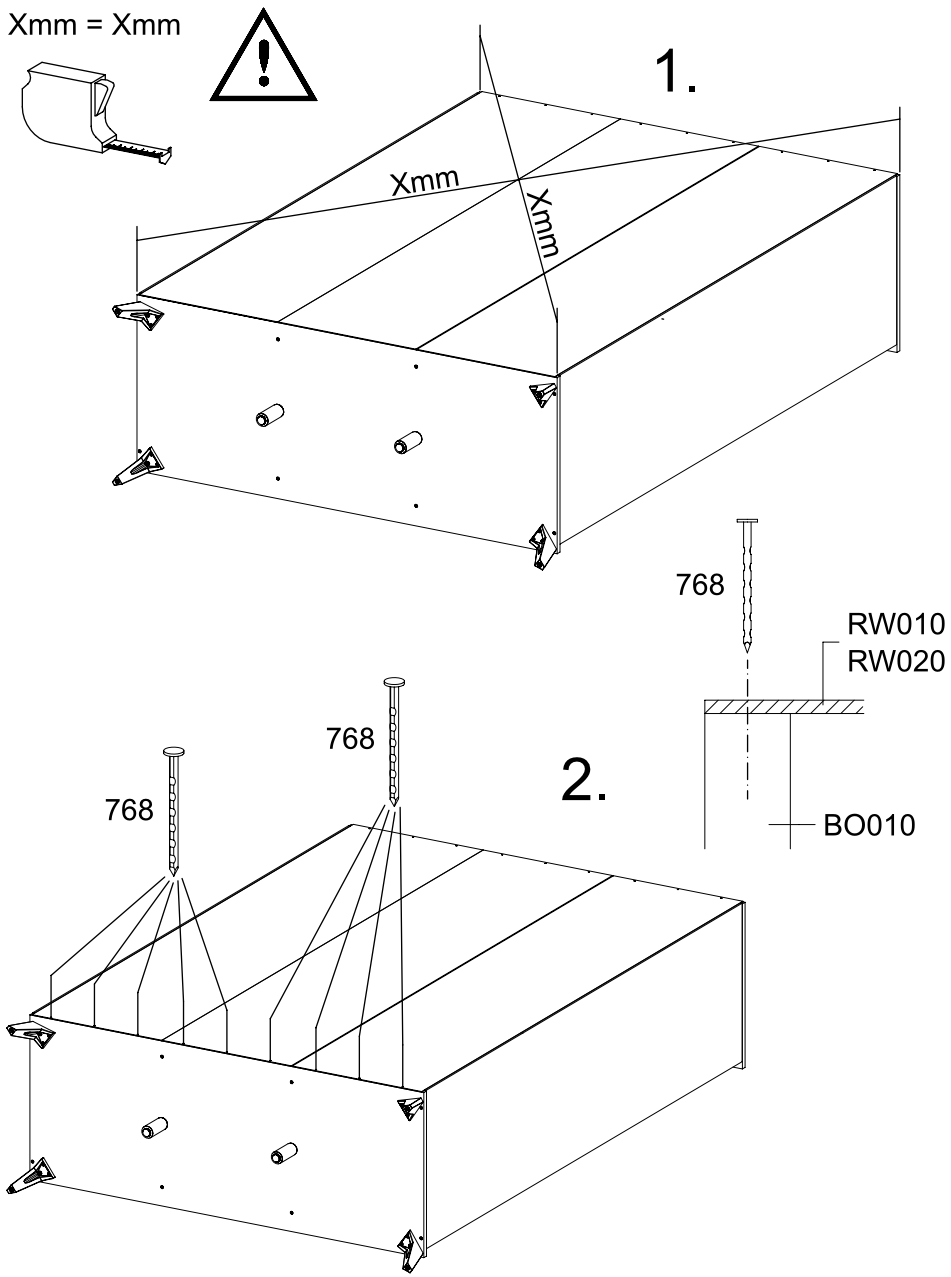

18 7x 215 3x20

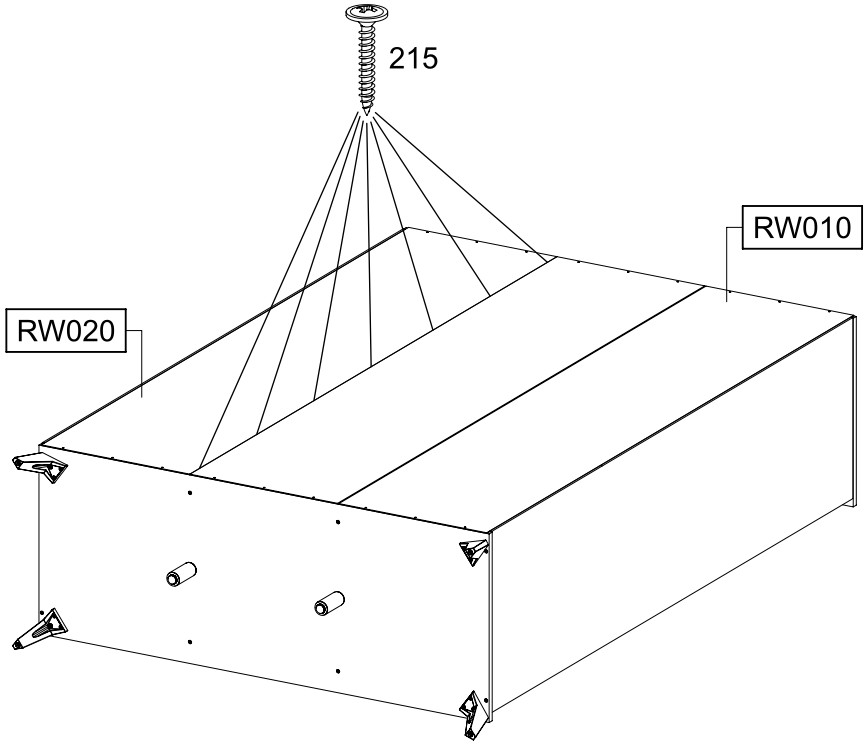

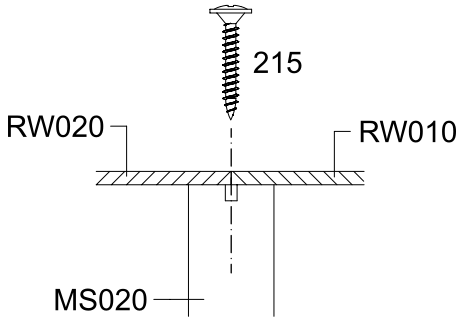

19 16x 768 1,5x25

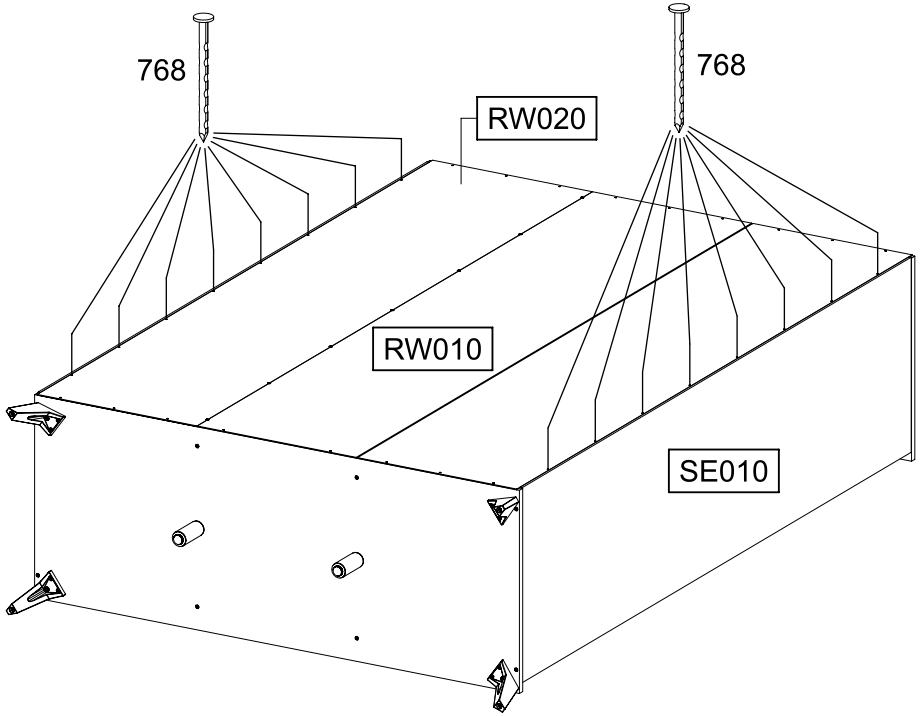

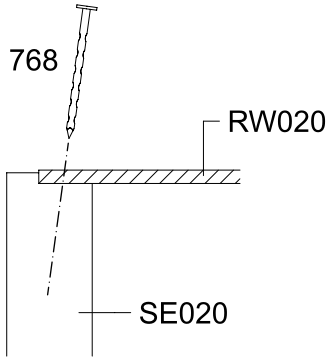

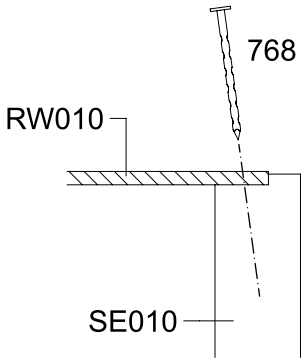

20

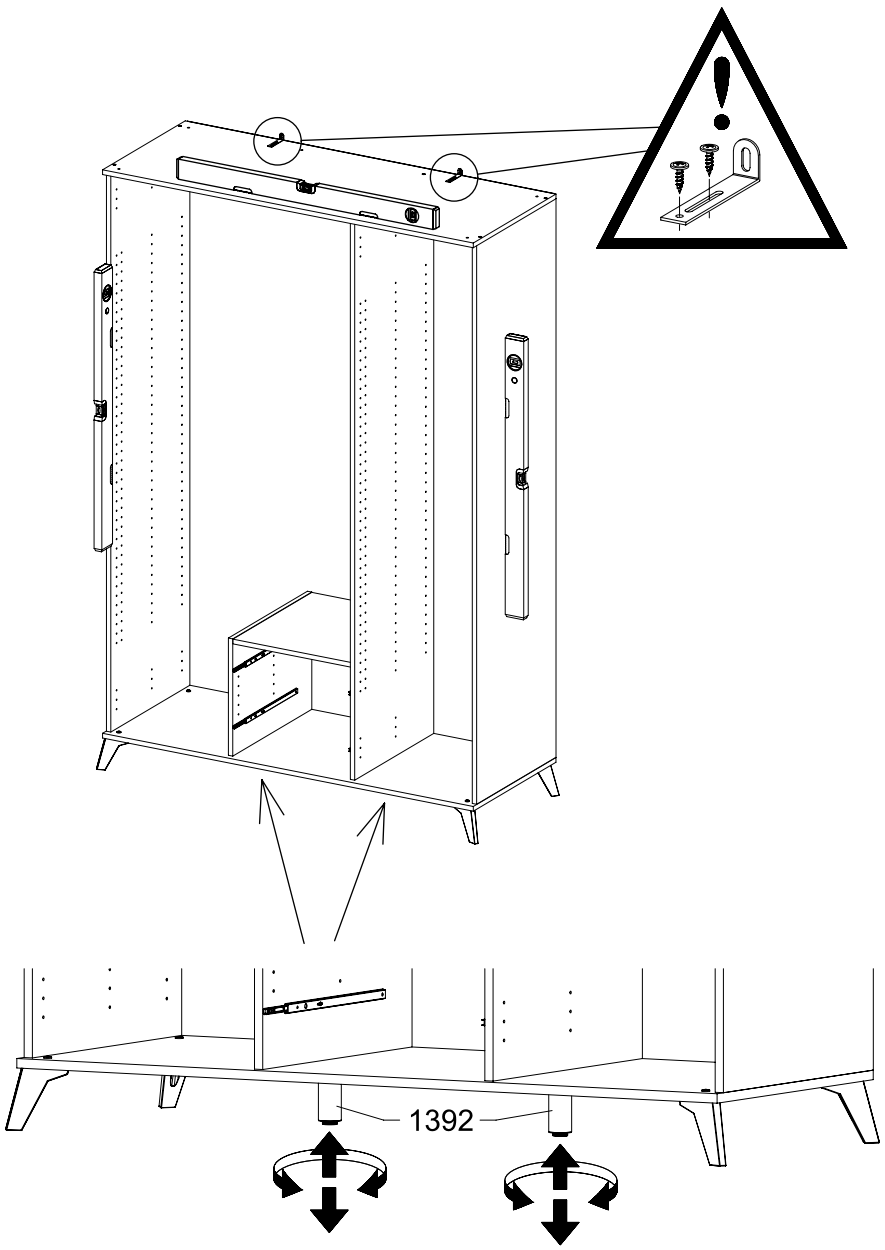

21

6x 405 Ø8

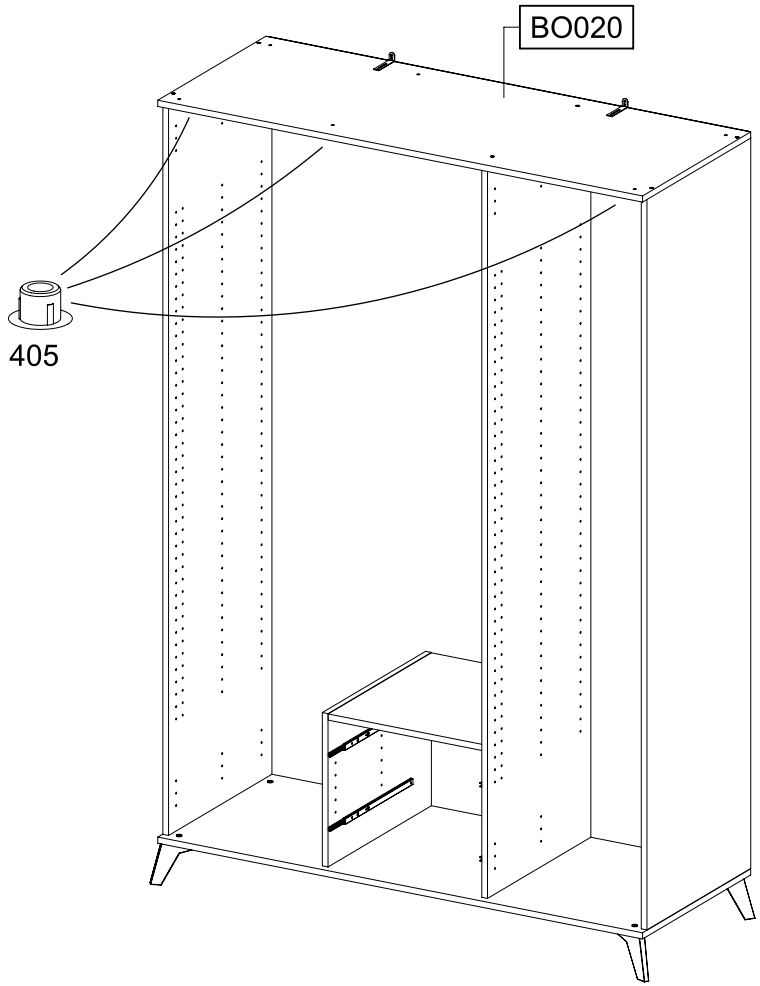

22

4x 568 M4x9

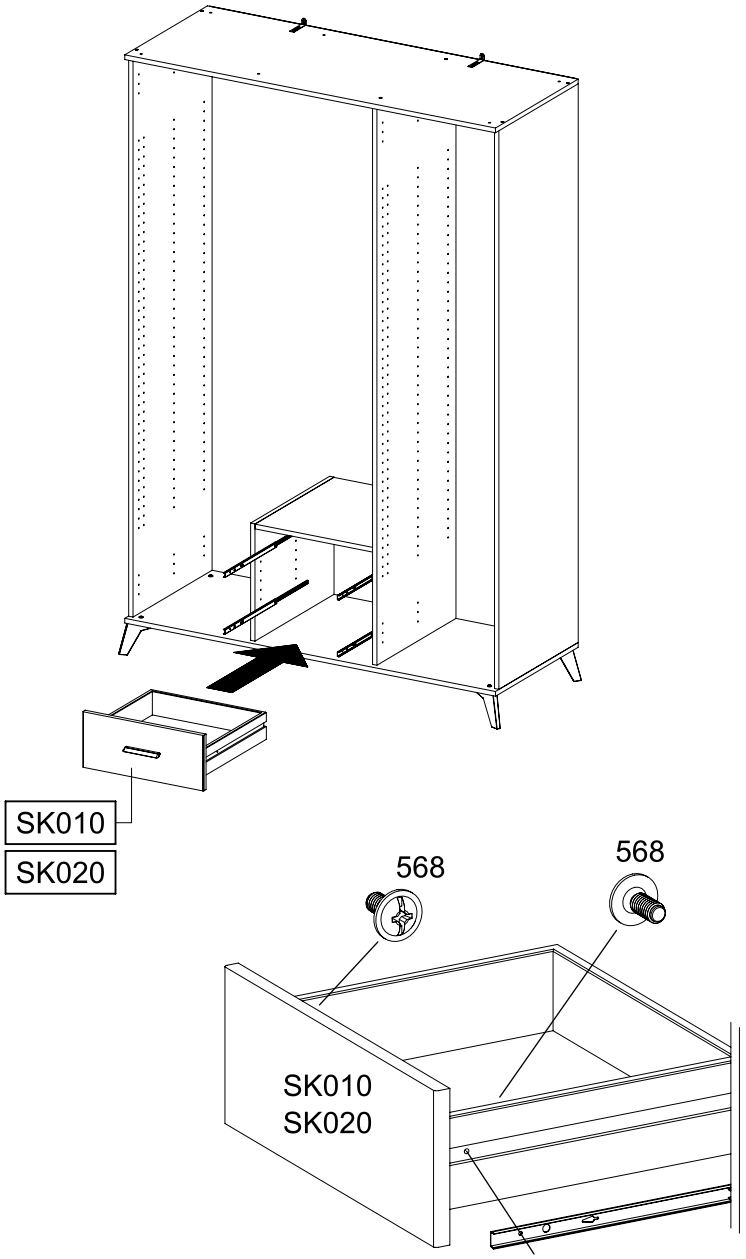

23

9x 116

VIDEO

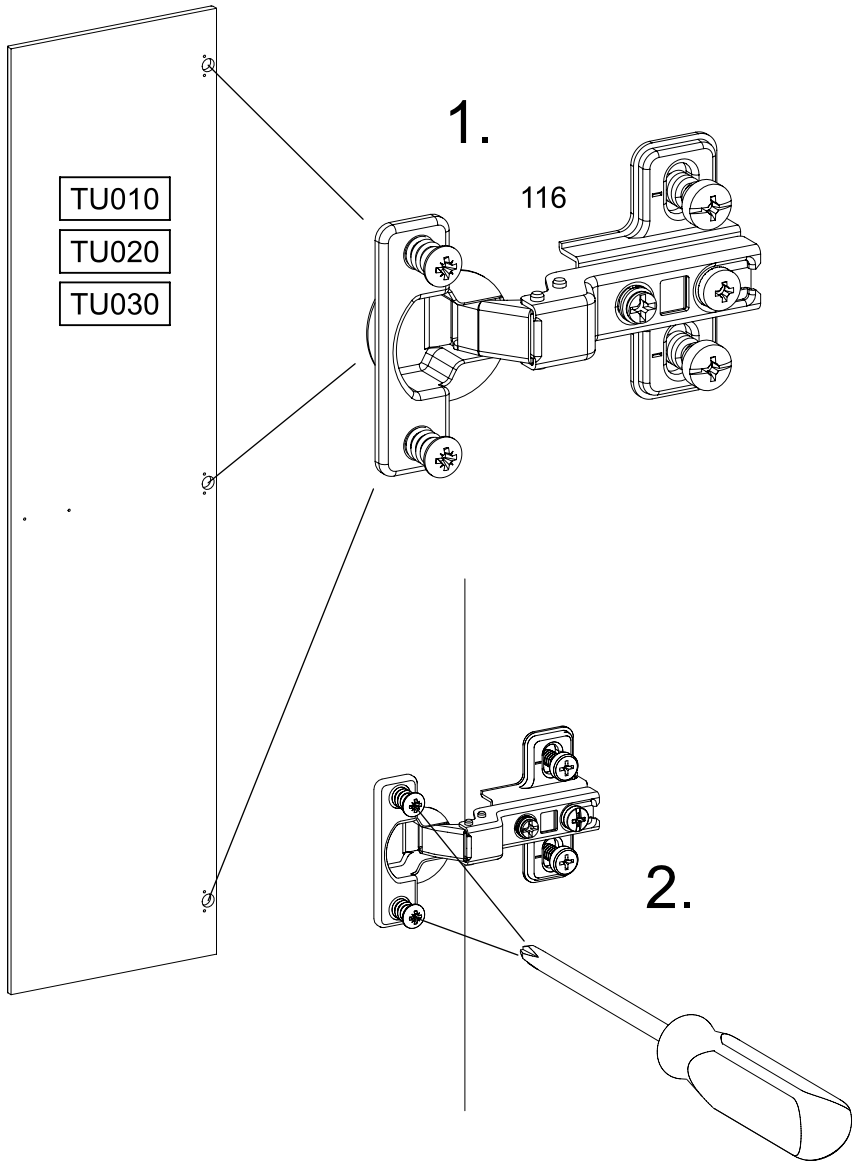

24

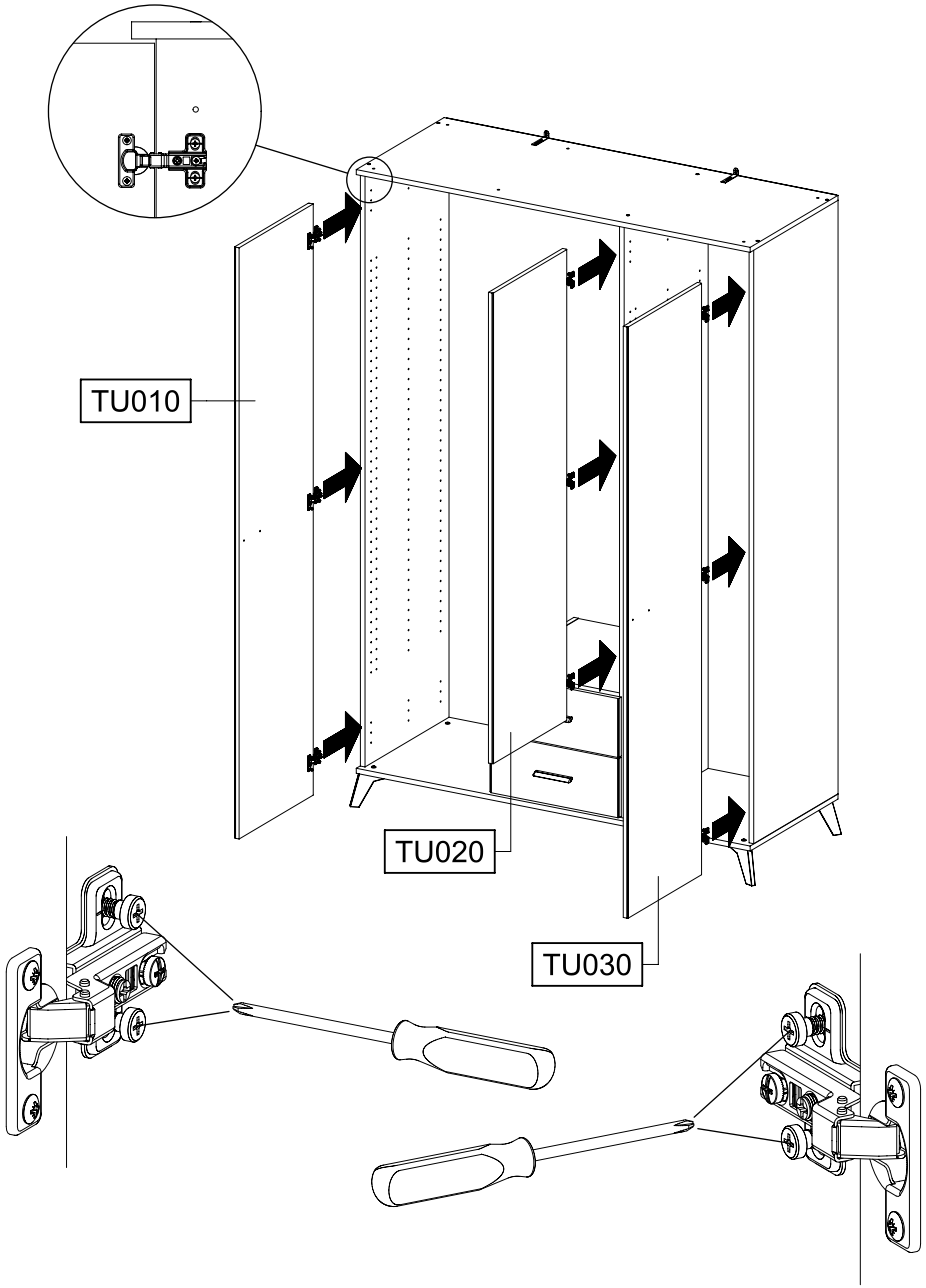

25

2x 427 4x20

1x 769 34x14,5x12

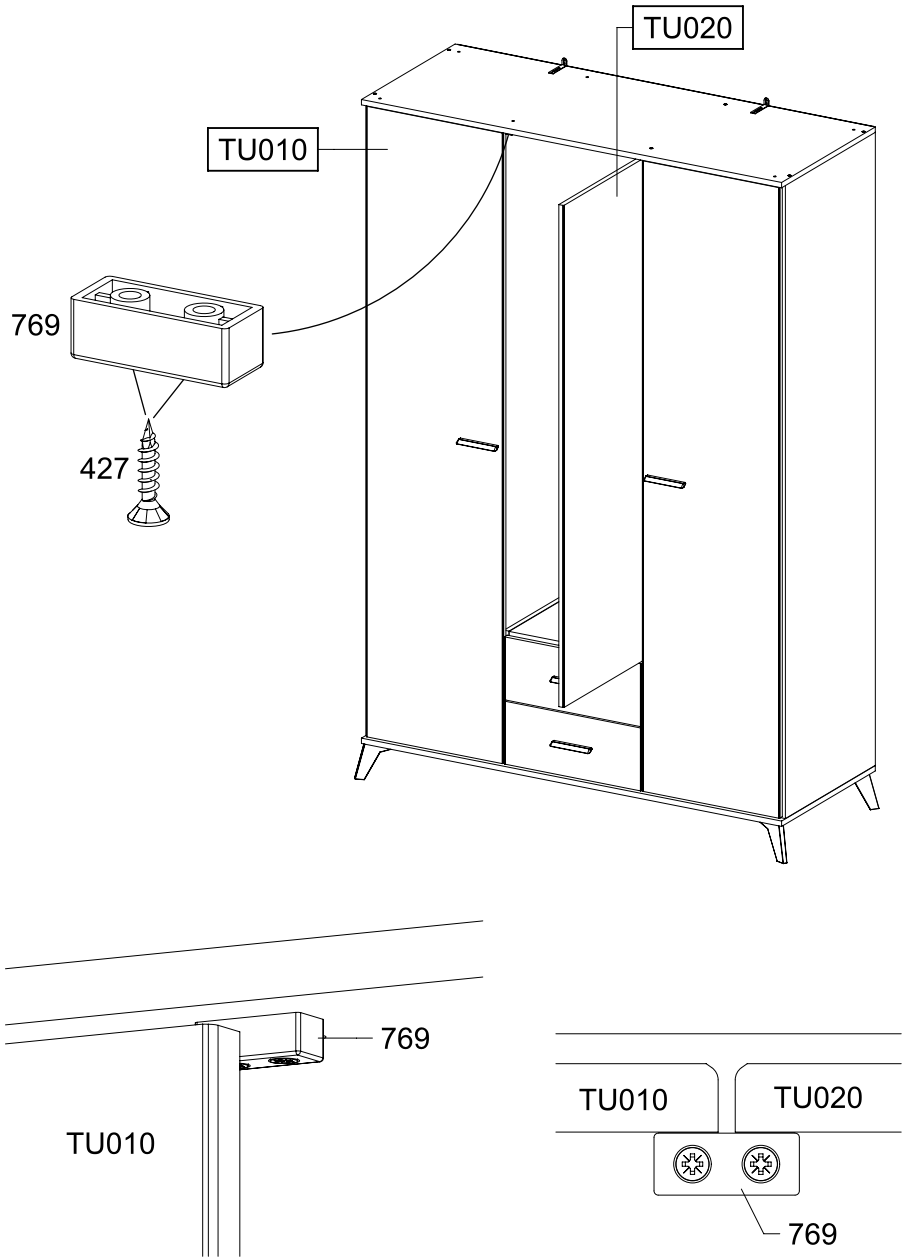

26
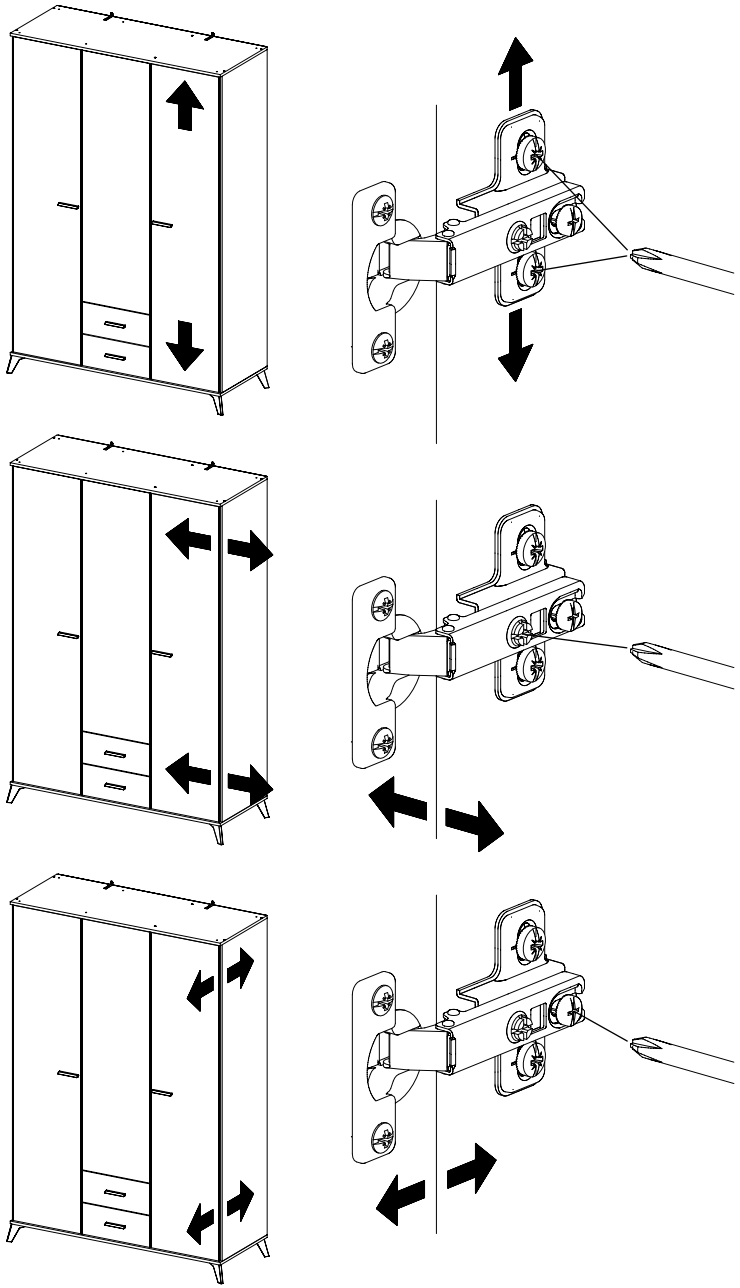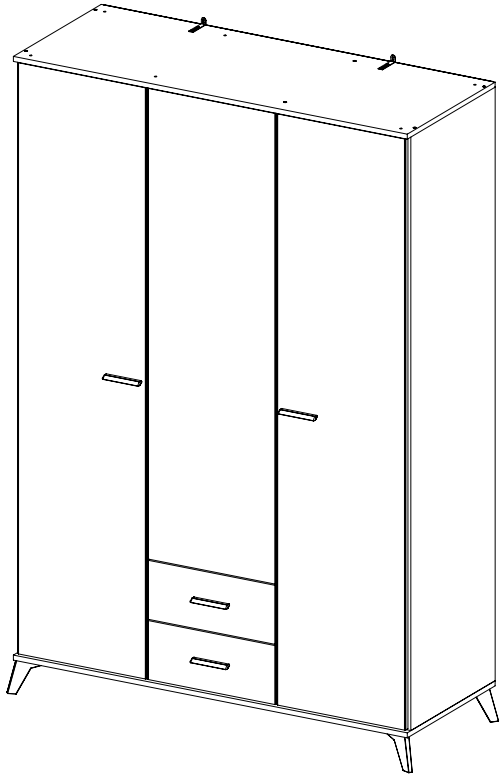
VIDEO